LABOMED®
ideas for vision

PRIMA pro

DENTAL MICROSCOPE

INNOVATIVE DESIGN FOR PRECISION DENTISTRY

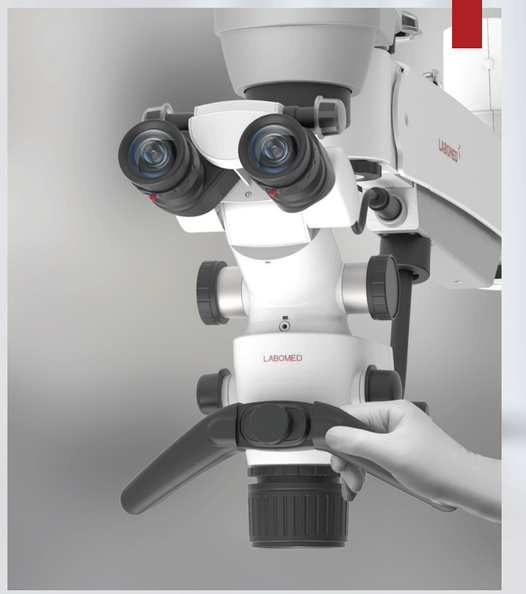

Welcome to the future of precision dentistry! Discover unparalleled clarity and precision with our cutting-edge **PRIMA pro** dental microscope. Designed to revolutionize your practice, this state-of-the-art instrument offers unrivaled magnification clarity and illumination, enabling you to perform intricate procedures with confidence and accuracy.

Whether you're involved in endodontics, restorative dentistry, or oral surgery, our **PRIMA pro** dental microscope will elevate your clinical capabilities. Experience a clearer view of oral health and unlock new levels of excellence in your dental procedures. Join us in shaping the future of dental care with our innovative microscope technology.

SEE MORE, DO MORE - TREAT WITH CLARITY

With its advanced MaxLite coated and Apochromatic corrected optics, experience image clarity and detail in the highest fidelity, allowing you to enjoy refined and relaxed examination and treatment planning. Redefining the standards of excellence, **PRIMA pro** boasts an array of user-focused features.

Our Auto Balance Arm (ABA) presents a unique ability in positioning your microscope, thanks to an onboard electromagnetic clutch system that glides at the push of a button. With user controls conveniently within reach, **PRIMA pro** maintains stability no matter what accessories or cameras are added. This streamlined design enhances workflow efficiency and ensures consistent, reliable performance.

LABOMED special **TrueLux** optical filter adapts high-color light to halogen-like warmth, catering to varying microscope illumination preferences. Achieve adaptable lighting for diverse user needs with ease.

Superb Optics

The best quality glass with the highest purity is our input, which is then processed under world class systems, machines, and under the guidance of a team with an internationally regarded engineering pedigree to produce crisp images every time.

Ergonomic Design

Our ergonomic design places your comfort at the forefront, ensuring fatigue-free use and reducing strain during delicate procedures. Thanks to ergonomically located controls and components and fluid articulation of arm and optical carrier, **PRIMA pro** provides fatigue-free use day after day in your dental practice.

True Light

Experience bright, homogenous illumination in **PRIMA pro** thanks to an efficient 50W LED system that delivers 200,000 Lux of brilliant, glare-free coaxial light. With a rated 50,000 hours of LED life, **PRIMA pro's** optical design ensures shadow-free illumination with light temperature near to natural daylight. **TrueLux** transformative filter is provided for quick change from bright white to warmer light environment for the object under view.

Empower your practice with our ProLine accessories developed to enhance the **PRIMA pro's** capabilities on day 1 or day 1000.

The ProLine suite of accessories includes the Nuvar Variable Focal Length Objective, Double Iris Diaphragm, and Camera Adapters, all meant to greatly enhance **PRIMA pro's** modularity.

The Nuvar CMO offers adjustable magnification from f=200 mm to f=450 mm with MaxLite optical coatings, enabling multi-user environments while minimizing in-procedure microscope repositioning.

The Double Iris Diaphragm improves contrast and depth of focus for clear photo-documentation of dental procedures.

Camera and smartphone adapters streamline digital workflow integration, allowing high-quality image and video capture for patient records, presentations, and research.

These accessories enhance treatment precision, streamline workflow, and maintain high standards of treatment and documentation.

SPECIFICATIONS

Observation Tubes	0-210° inclinable binocular tube
IPD	49-78 mm
Eyepieces	Standard: WF 10x/18 mm with lockable eye guards Option: WF 12.5x/18 mm with lockable eye guards
Magnichanger	Apchromatic 6 step: 0.3x, 0.5x, 0.8x, 1.3x, 2.0x and 3.0x MaxLite coated
Objective	Standard: f250 mm focusable; Options: f200 mm focusable; f300 mm focusable; f400 mm focusable NuVar 10: f 300-400 mm, WD: 220-320 mm NuVar 20: f 295-495 mm, WD: 200-400 mm
FOV	80.20mm-8.80mm
Light source	50W LED, 100-240V
LUX	200k @ 200mm CMO
Maximum Wattage	200w
Built-in Filters	Green, Yellow and **TrueLux**
Microscope carriers	360° ABA carrier
Optional accessories	Double iris, Double beam splitter inclined, Rotoplate, Proline range of camera adapters & smart phone adapters, Assistant binocular attachment

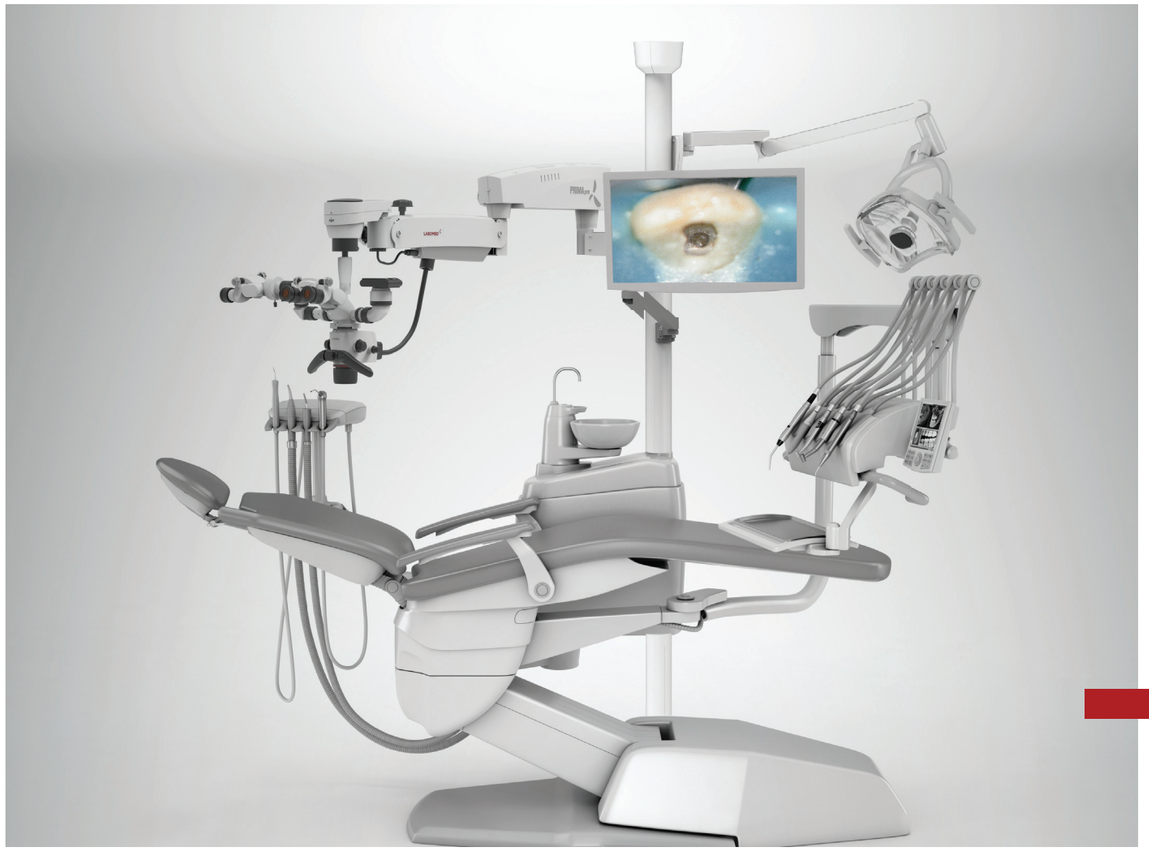

PRIMA pro offers versatile mounting configurations, from floor stand to ceiling mount and the Axius multi-task column, adaptable to any operatory space.

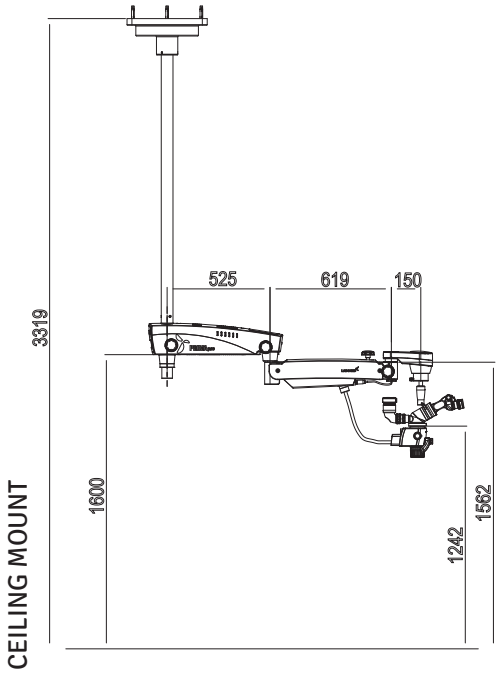

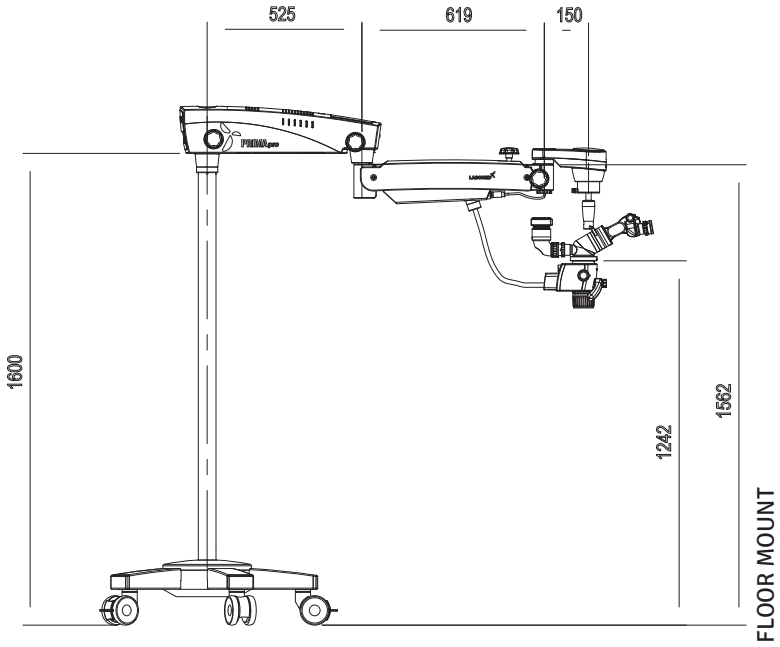

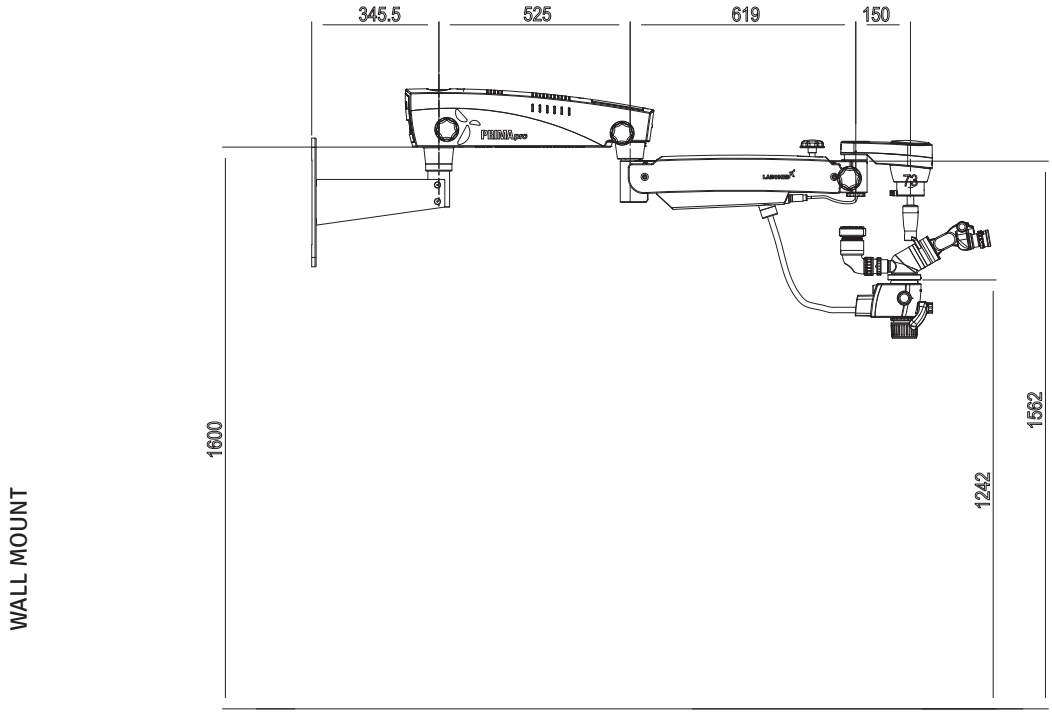

DESCRIPTION	CONFIGURATION	CATALOG NO
PRIMA pro	Floor Mount	6183601
PRIMA pro	Wall Mount	6183602
PRIMA pro	Ceiling Mount	6183603

Labotech Microscopes India Pvt Ltd
#19 HSIDC Industrial Estate
Ambala Cantt
Haryana, Pincode: 133006
INDIA

LABOMED
ideas for vision

A16372 ISO 13485 : 2016
LABOTECH MICROSCOPES INDIA Pvt Ltd

6183000-796 1.0 301124