# PRIMA DNT

DENTAL MICROSCOPE

LABOMED®
ideas for vision

# PROGRESS THROUGH INNOVATION

# PRIMA DNT

At LABOMED, harmony has always been our guiding principle when designing products. Staying true to this philosophy, we proudly introduce a new dimension in performance, flexibility and economy for modern restorative and endodontic practices – the PRIMA DNT.

Each microscope is built to perform under the most demanding of clinical environments. The PRIMA DNT offers an array of configurations and ergonomic accessories to address all dental practice needs.

# FOR THE MOST DEMANDING ENVIRONMENTS

Over the years, the microscope has become a standard tool of care for a diverse set of dental applications from routine crown preps to canal identification and pulp removal. Today, dentists in not just the endodontics but also the restorative community want their microscopes to be more agile, versatile and efficient than ever before. Answering this call, LABOMED was the first to develop a single LED-based illumination concept for a dental microscope. That design leadership has delivered an evolved illumination system that is highly efficient, cool, and offers a truly white LED with Lux values nearing that of Xenon, but with a 60,000 hour rated bulb life.

Given most clinics have spatial constraints, a microscope needs to be more compact than ever. Housing the LED light source and electronics within the Prima arm assembly eliminates the need for bulky illumination housing, yielding an overall space saving of approximately 20% compared to conventional Xenon and Halogen systems.

The Prima DNT comes equipped with an Apochromatic optical system that promises the most vivid and honest images in its class. This is achieved with LABOMED's proprietary *MaxLite™* coatings that provide highest efficiency in transmission and reflection through the entire visible spectrum. *MaxLite™* renders optics with excellent anti-fungal, anti-fog and scratch resistant properties.

To address digital documentation needs, a host of digital SLR, video camera, and CCD adapters are made available with the *ProLine* range of camera adapters & smart phone adapters.

*An ergonomic Rotoplate and Extender kit (optional inclined beam splitter available) eliminates neck craning, making it comfortable to view hard-to-see regions of the mouth from a 9 and 3 o'clock seated position.*

# PRIMA DNT ADVANTAGES

The *NuVar*™ variable objective enables dentists to select the ideal working distance based on procedure requirements. Different *NuVar*™ system provides fluid adjustment of working distance from 220mm to 320mm, 200mm to 270mm and 200mm to 400 mm.

For space constrained operatories or teaching environments, LABOMED has developed a more compact option called the DNT Trainer model, with a lower center of gravity and short swivel arm.

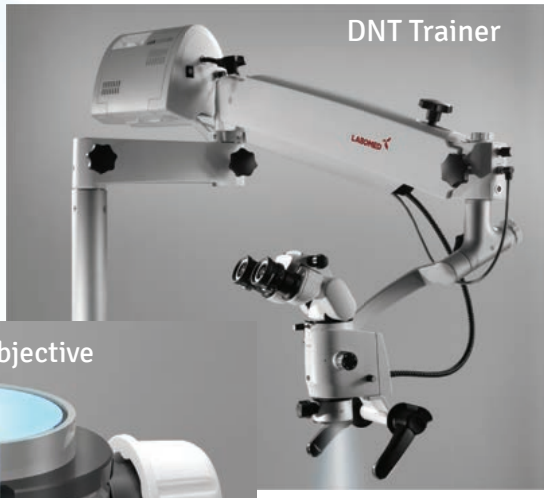


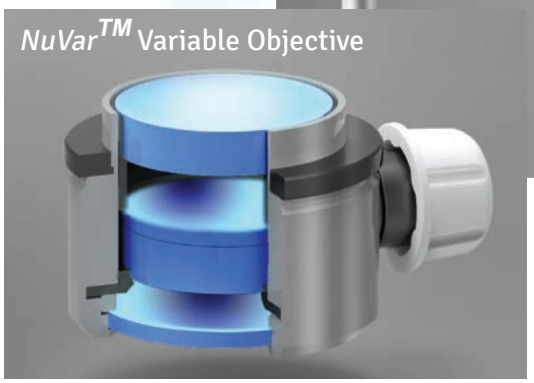

The PRIMA DNT comes with a clip-on objective protector to shield the optics from spray back and debris.

Floor, wall, ceiling, and traditional table mounting options are available, as well as an extra long suspension arm (providing an additional ~250mm) for further removed mounting orientations. A host of eyepiece and objective options are available to further customize the PRIMA DNT.

## Wall Mount

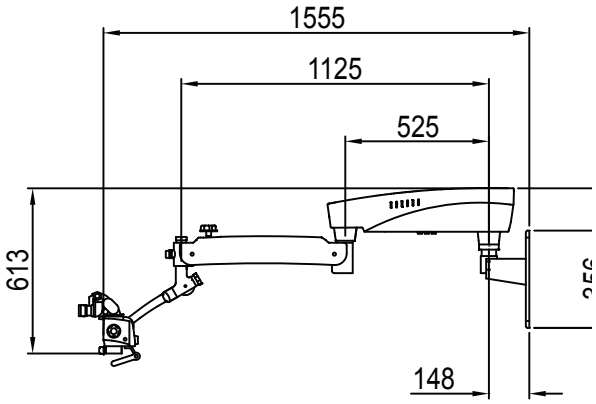


## Table Mount

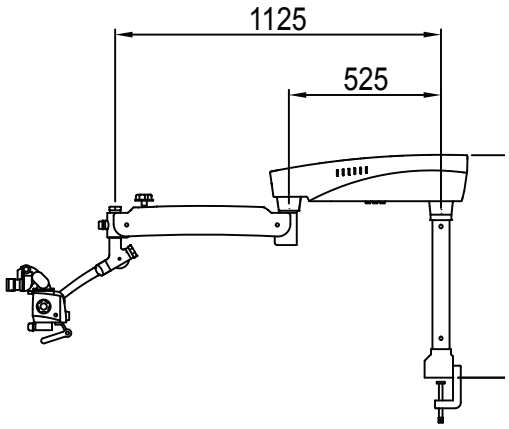


## Ceiling Mount

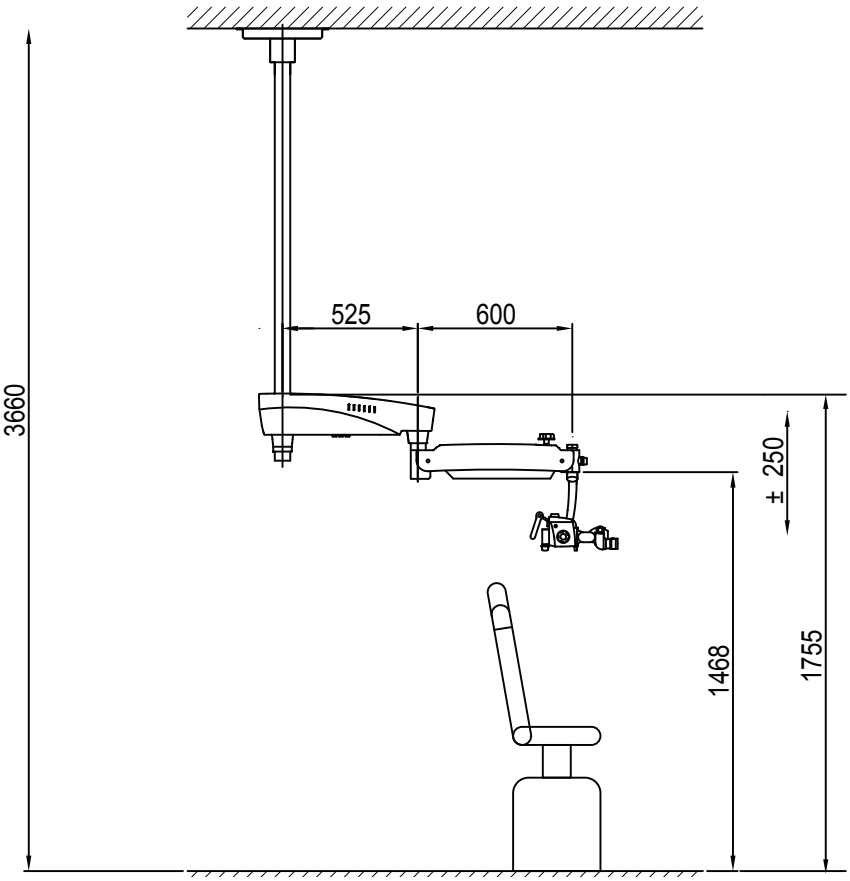


## Floor Mount

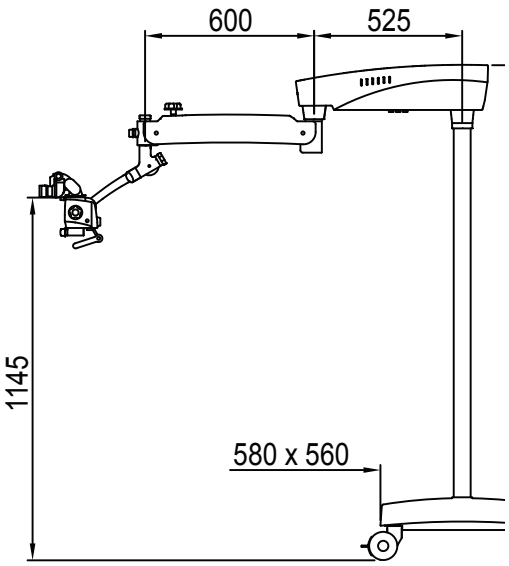


All dimensions in mm

# DENTAL MICROSCOPE

SPECIFICATIONS

| | |
|---|---|
| **Observation tubes** | Standard: 0-210° Tiltable binocular tube |
| **IPD** | 50-75 mm |
| **Eyepieces** | Standard: WF 10X/18 mm with eye guards and dioptre lock mechanism<br>Option: WF 12.5X/18 mm with eye guards and dioptre lock mechanism |
| **Dioptre Adjustment** | ± 5 mm |
| **Magnichanger** | Apochromatic 5 step: 0.4X, 0.6X, 1.0X, 1.6X and 2.5X **MaxLite* coated |
| **Objective** | Standard f: 250 mm focusable;<br>Options: f: 200 mm focusable; f: 300 mm focusable & f: 400 mm focusable<br>*NuVar*™ 7: f 290-360 mm WD: 200-270 mm<br>*NuVar*™ 10: f 300-400 mm WD: 220-320 mm<br>*NuVar*™ 20: f 295-495 mm WD: 200-400 mm |
| **FOV** | 66-10.6 mm |
| **Magnification Range** | 2.7x-17.0x |
| **Fine focus** | Manual, through objective adjustment knob |
| **Light source** | 50W LED, 100-240V |
| **LUX** | 125K |
| **Maximum Wattage** | 200 Watts |
| **Color Temperature** | 6500K |
| **Built-in filters** | Green and Yellow |
| **Vertical movement of arm** | 550 mm with power saver light cut off at park position |
| **Microscope carriers** | 120˚ carrier |
| **Optional accessories** | Beam splitter (straight & inclined), Rotoplate, Extender, Double Iris,<br>Low height Ergo view, *ProLine* range of camera adapters & Smart phone adapters<br>Assistant binocular attachment |

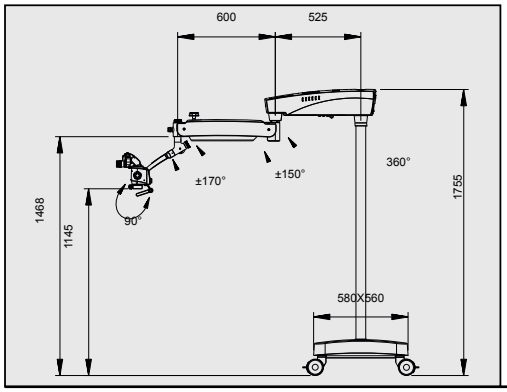


All dimensions in mm

| DESCRIPTION | CONFIGURATION | CATALOG NO. |
|---|---|---|
| Prima DNT | Floor mount | 6138000 |
| Prima DNT | Wall mount | 6137101 |
| Prima DNT | Ceiling mount | 6137201 |
| Prima DNT(trainer) | Table mount | 6167500 |
| Prima DNT | Wall mount long arm | 6137102 |
| Prima DNT | Ceiling mount long arm | 6137202 |

LABOMED®


Labo America, Inc.
920 Auburn Court
Fremont, CA 94538

Tel: (510) 445-1257
Fax: (510) 445-1317
E-mail: sales@laboamerica.com


A16372 ISO 13485
LABOMED

www.laboamerica.com

Distributor


With a policy of continuous development, Labo America, Inc. reserves the right to change design and specifications without prior notice.

© Labo America, Inc. All rights reserved



6138000-796 1.5 011019