LABOMED

MET 400
User Manual

Inverted Metallurgical Microscopy

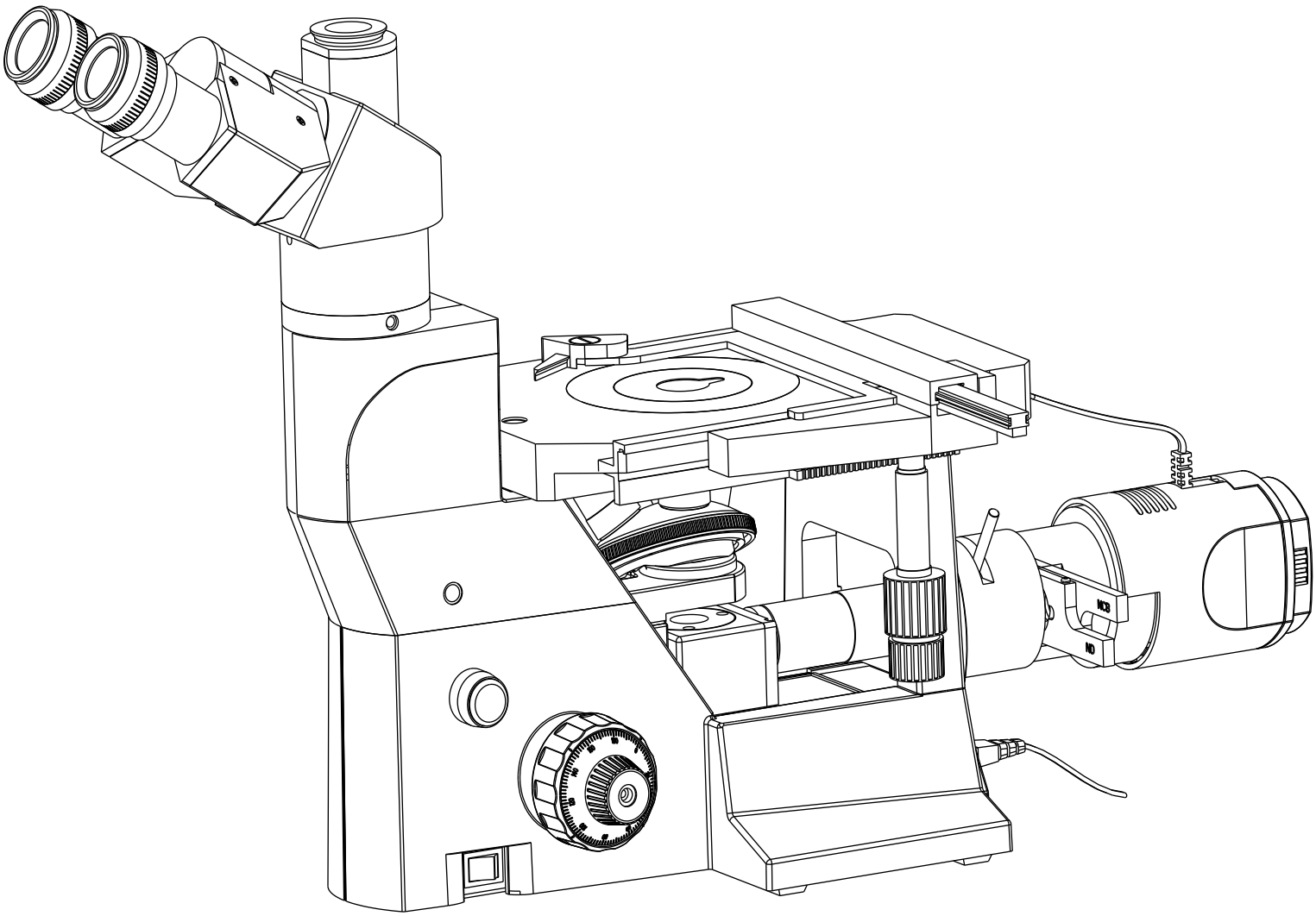

To ensure proper use of this instrument as well as to avoid injury while operating instrument, understanding this manual completely before use is highly recommended.

CONTENTS

1	INTRODUCTION	1
2	SAFETY INFORMATION	2
3	UNPACKING YOUR MICROSCOPE	3
4	MET 400 TRINOCULAR DIAGRAM	4
5	INSTALLING THE INCIDENTAL LIGHT ILLUMINATOR	5
6	INITIAL SETUP & ASSEMBLY	6-8
7	DETAILED BRIGHT FIELD OBSERVATION PROCEDURE	9
8	DETAILED OBSERVATION PROCEDURE	10
9	OPTIONAL ACCESSORIES	11
10	CARE & MAINTENANCE	12
11	SPECIFICATION	13
12	TROUBLESHOOTING	14

1 INTRODUCTION

The MET 400 inverted microscope sets a new standard for inverted metallurgical microscopes.

It combines high performance and distinctive styling with the high quality craftsmanship for which Labomed is known. The excellent image and comfort of use are the basics of Labomed MET400.

The ergonomics of the design, an aesthetically configured MET400 is the instant choice for Metallurgical Studies & relative sciences. Offered with Infinity Corrected True color optical system, choices of observation tubes, soft feel turret movement, stage with micro manipulation offer a paramount performance.

The user should be aware that the protection provided by the equipment may be impaired if used with accessories not provided or recommended by the manufacturer or used in a manner not specified by the manufacturer.

2 SAFETY INFORMATION

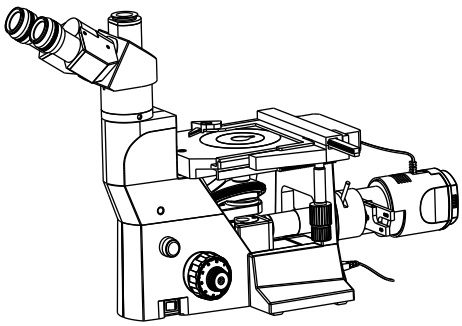

Fig. 1

1. It is important to follow Safety Instructions carefully to avoid any kind of personal injury or damage to this Instrument. It is recomended for your safety to read the manual throughly & do not discard this manual rather preserve it for easy reference while operating for best results.

2 To avoid potential electrical hazards when replacing halogen bulb, turn the microscopes main switch to the OFF position and disconnect power cord from wall outlet in advance. Whenever you replace your microscope bulb, allow lamp socket and bulb to cool before touching (Fig. 1)

Applicable bulb replacement: 6V30W Halogen bulb P/N EL-455;

Safety Symbols

The following code categories describe the degree of danger or damage likely to be incurred in the event of user error made in ignorance of these symbols.

Symbol	Explanation
	Hot parts symbol. This symbol is placed on bulb housing and on other parts to indicate that they may be hot. Never touch those parts just after the equipment has been used. Allow sufficient time to cool before touching them. In the event of user error, it is possible to injury.
WARNING	In the event of user error, death or serious injury is possible.
ATTENTION	In the event of user error, product may be damaged.
	The following describes icon directives
	This icon denotes “Refer to User Manual” and “Caution”.
	This icon represents the productive earth.
	This icon represents alternating current.
	This icon represents the power switch is turned OFF.
	This icon represents the power switch is turned ON.
Labeling Infromation	
SN	Number following this symbol indicate the serial number of the equipment.
REF	Character following the symbol indicate the catalog number of the equipment.

3 UNPACKING YOUR MICROSCOPE

MET400 comes securely packed in the custom configured foam packing, to prevent it from all shocks and transit damages.

After removing your Microscope from its packing, make sure that all of the following contents are present. "Please note that the contents of your Microscope may vary as the optional configuration, contrasting method or viewing body opted for may not be of the standard configuration highlighted here":

1. Microscope body
2. Observation tubes, as ordered
3. Eyepieces Pair
4. 2 Filter Sliders (ND & NCB)
5. Stage Plate (fitted on Body)
6. Objectives Set - Standard 5x, 10x, 20x & 50x
7. Epi Illuminator assembly with Two Filter Slots
8. Installation tools Allen Key - 3mm
9. Power Cord
10. Mechanical Stage (Optional) if ordered.
11. Specimen Holder Plate
12. Three different size of Petri Dish holders
13. Two Hand Rests

DIAGRAM SHOWING PARTS

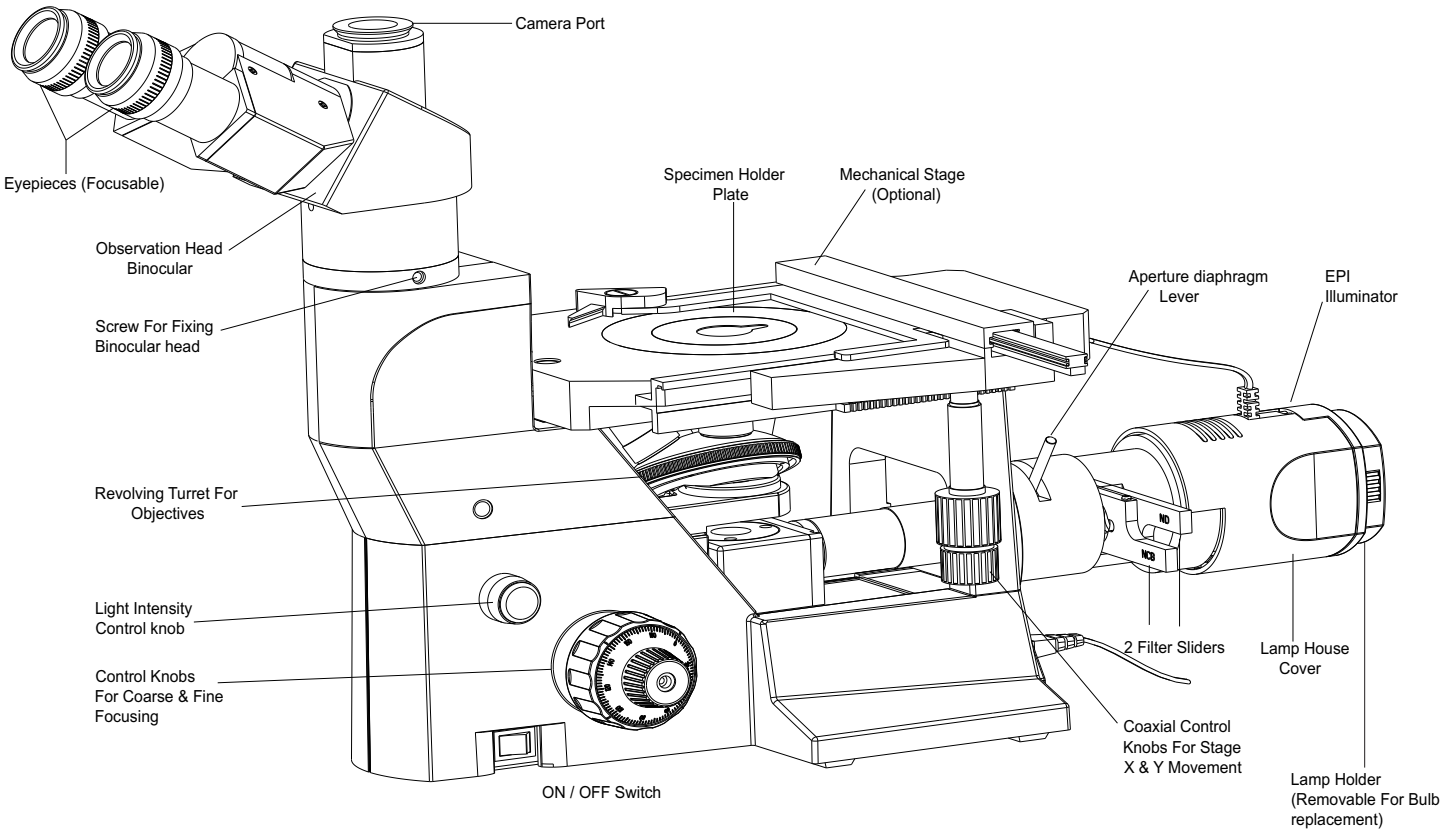

TRINOCULAR MET-400

Fig. 2

Illuminator

The Illuminator Unit is to be fixed to the main Microscope Body with 3 screws using Allen wrench supplied along with Illuminator. Three Tapped Holes are provided in the Base Unit as shown in Diagram below.

Important Note: ***Make sure the Power Cord is not connected at this stage.***

After the Illuminator Assembly is properly fixed, connect the cable from Lamp House to the Socket provided in Base of Microscope as shown in below picture.

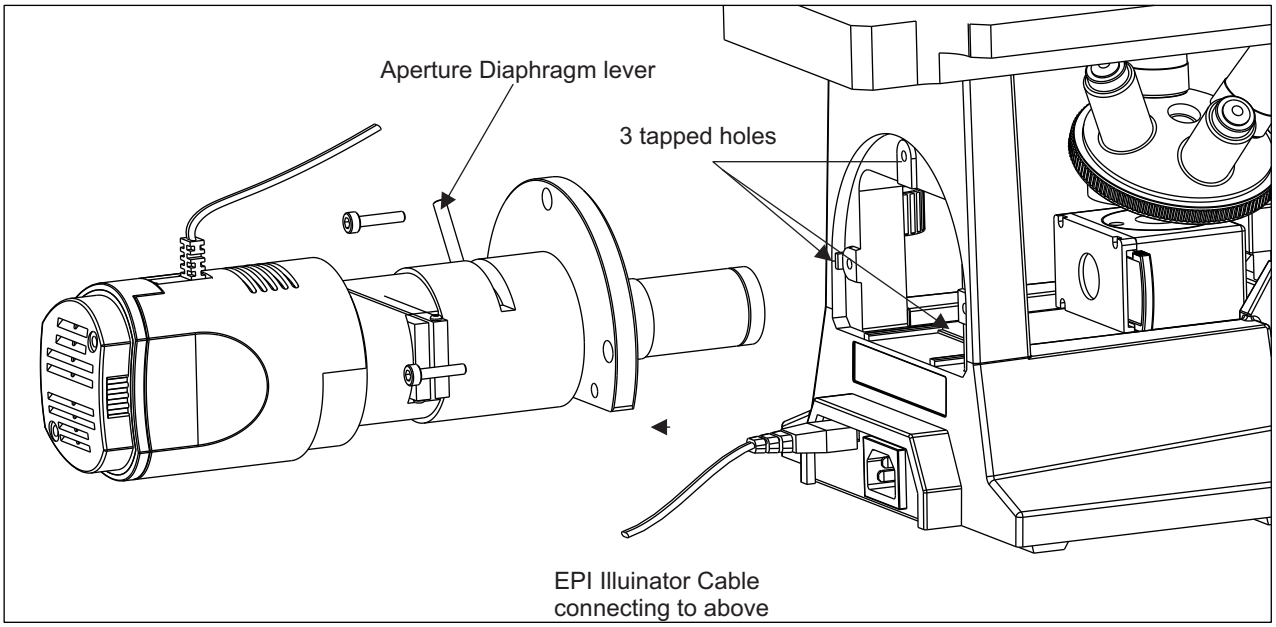

Fig. 3

Adjusting the Aperture Diaphragm
In order to achieve good resolution of the optical image, the contrast and depth of focus it is necessary to control the numerical aperture of the Illumination system through the lever provided on the illuminator - See Diagram above.

Reducing the aperture increases the contrast & the depth of focus. Increasing the aperture increases the brightness & resolution.

1. Place a specimen with plain surface on the stage.
2. Focus on the specimen with 10x Objective.
3. Remove one of the Eyepiece & look through the Eyepiece Tube to ensure the diaphragm image is visible in the pupil of the Objective
4. It is recommended to keep the Aperture Diaphragm image in nearly 3/4th of the pupil of Objective. Adjust with aperture lever your required image quality.

6 INITIAL SETUP & ASSEMBLY

1 Observation Head

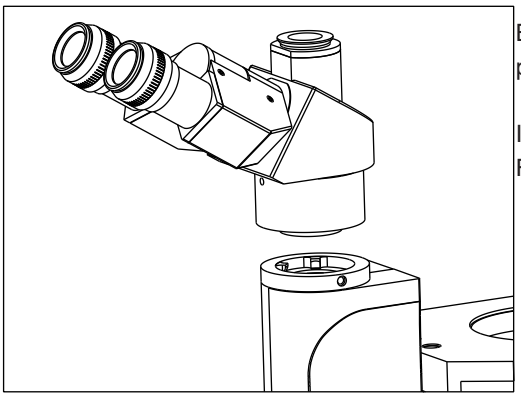

Fig. 4

Base unit is assembled with co-axial focus mechanism, turret and stage plate, as per procedure below:

Install the observation head using the following procedure as shown in Fig. 4:

1. Using the 3mm allen wrench (provided), loosen the Head Locking Screw (1) and remove the dust cover cap provided in dovetail cavity as well as on the observation head dovetail.
2. Mount the Observation Head by engaging the dovetail provided at the bottom of the head into the dovetail cavity provided in the microscopes arm.
3. Tighten the Head Locking Screw (1) after positioning the Observation Head as desired. See figure 4.

2 Mounting the Objectives

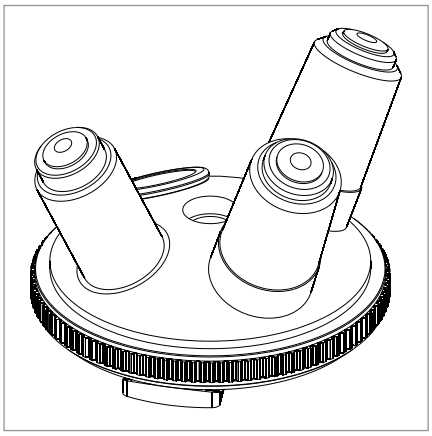

Fig. 5

Settle down the nosepiece by rotating coarse adjustment knob towards back. Remove the dust prevention caps from the nosepiece.

Screw the objective with the lowest magnification into the revolving nosepiece from the left side of the microscope. Turn the nosepiece clockwise and mount the remaining objectives in ascending magnification order. (Fig. 5)

⚠ **Clean the objectives periodically.**
⚠ **Be sure to cover any unused threaded position on Turret with the dust prevention caps to prevent from dirt and dust from getting inside.**

3 Mounting of Eyepieces

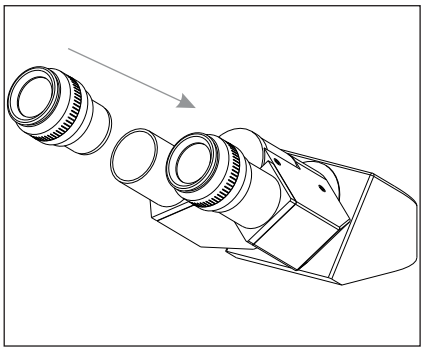

Fig.6

Insert the eyepieces into the ocular tube of Observation Head after removing the protective caps from the observation tube.

For Dioptre Adjustment on Eye Piece See Page 7

4 Adjusting the Interpupillary Distance (IPD)

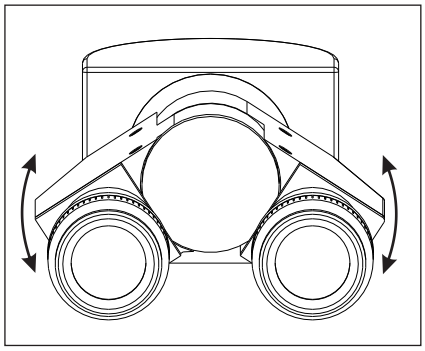

Fig. 7

The inter-pupillary distance adjustment consists of regulating the two eyepieces to align with both the eyes' pupils so that you can observe a single microscopic image through two eyepieces in stereo vision. This greatly helps to reduce fatigue and discomfort during observation.

While looking through the eyepieces, move both eyepieces laterally until the left and right fields of view coincide completely. The position of index dot (•) indicates the inter-pupiliary distance value.

Note your interpupillary distance so that it can be quickly referred to in the future. This is especially important if multiple users work with the microscope.

5 Adjusting the Diopter

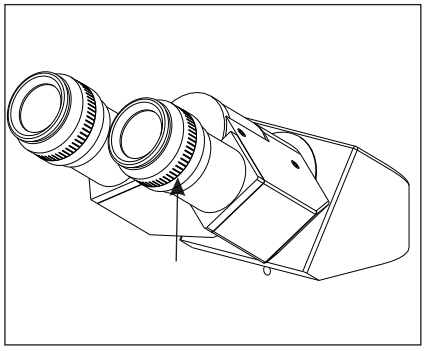

Fig. 8

Adjust the Diopter setting to "0" position by matching the fiducial lines on both eyepieces. Now looking through one eye piece (either left or right), turn the coarse and fine focus adjustment knobs to bring the specimen into focus.

Adjust the focus of other side of eye piece by looking through it and at the same time optimizing the Dioptre scale of the Eye Piece.

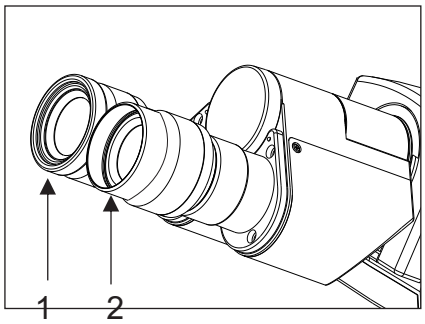

Fig.9

Using the Eye Guards

When Wearing Eyeglasses

Use with the eye guards in the normal, folded-down position. This will prevent the eyeglasses from being scratched (Fig # 9 Part 1).

When Not Wearing Eyeglasses

Extend the folded eye guards outwards (direction of the arrow) to prevent ambient light from entering into your line of vision (Fig # 9 Part 2).

7 Mounting the Mechanical Stage

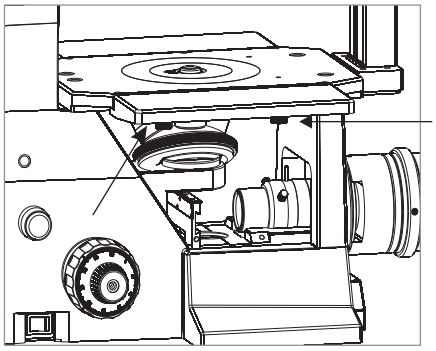

Fig. 10.1

The Mechanical stage is to be mounted on the Right Side of Square Stage with the help of two clamping screws (provided) underneath of the plain square stage (shown with arrow marks on Fig 10.1)

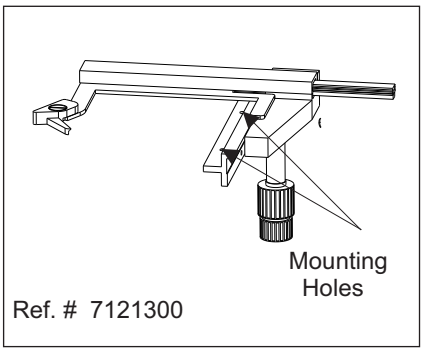

Fig. 10.2

8 Bulb Replacement

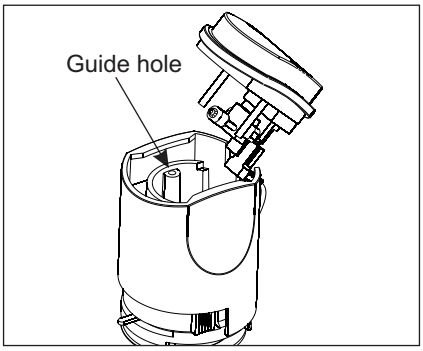

Fig. 11

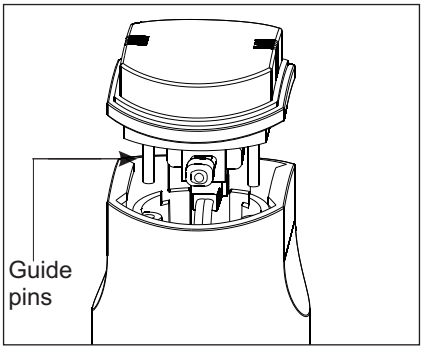

Fig. 12

* ***Make sure the Power Cord is not connected.***

Use only recommended 6V-30W high intensity Halogen bulb. Applicable bulb replacement 6V-30W Halogen Bulb P/No. Ref. # EL-455.

Pull out the lamp socket and pull out the blown bulb using a soft cloth. Gently insert the new bulb. Do not squeeze or press the bulb too much as it can cause damage to the bulb and hand.

Fit the lamp socket by aligning the guide pins with the condenser guide holes. Push the lamp socket gently into the transmitted light illuminator. (Fig. 11, 12)

SUMMARY OF BRIGHTFIELD OBSERVATION PROCEDURE

Click the main switch to “ON”

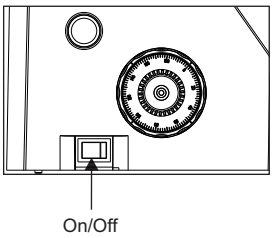

Place the specimen on the stage. Polished surface facing the objectives below.

Engage the 10X objective in the light path.

Adjust the observation tube and eyepieces
Adjust the interpupillary distance.
Adjust the dioptric setting.

Adjust the aperture iris diaphragm Epi Illuminator (Ref. Fig on Pg. 7

Engage the objective to be used in the light path and bring the specimen in focus.

Engage the required filters.

Adjust the brightness.

Observe Specimen.

8 DETAILED OBSERVATION PROCEDURE

1 Turning the Lamp ON

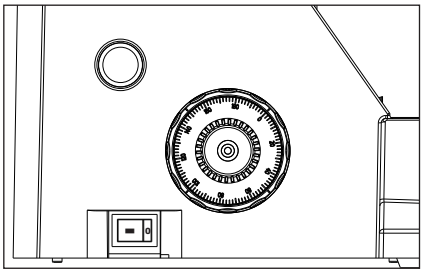

Fig. 13

1. Click the main switch to "**I**" (ON) as shown in Figure 17.
2. Rotating the light intensity adjustment knob in the direction of the arrow increases the brightness and rotating the knob in the opposite direction decreases the brightness. The intensity bar on the knob indicates the direction of intensity level.

2 Placing specimen on the stage

Place the Metallurgical specimen on the stage plate. The specimen should have sufficient polished - reflective surface.

In case your microscope has mechanical stage mounted, use appropriate holder plates. (See details on Page 13)

3 Adjusting the Focus

Focusing Procedure - use of Coarse focus knob & Fine Focus Knob.

1. Rotate the coarse adjustment knob (1) clockwise so that the objective (3) is as close as possible to the specimen (We recommend starting with 10X).
2. While observing the specimen through the eyepieces, slowly rotate the coarse adjustment knob (1) counterclockwise to lower the objectives.
3. When coarse focusing of the specimen is obtained (an image is observed), rotate the fine adjustment knob (2) for fine detail focusing.
4. Adjusting Torque for Coarse Focus Knob.
   Rotation of tension adjusting ring towards coarse knob will increase focusing torque. Rotating tension adjusting ring towards stand will decrease the focusing torque.

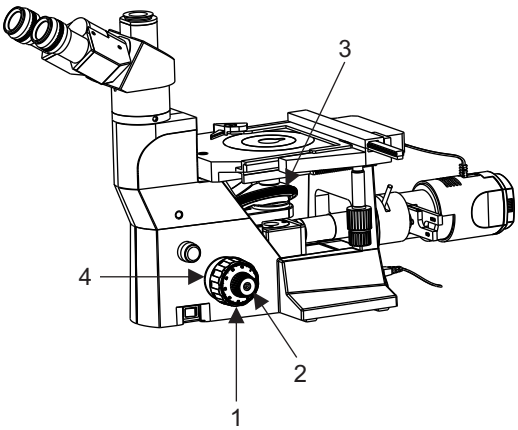

Fig. 14

Working Distance (WD)

The WD refers to the distance between each objective and the specimen, when acute focus of the specimen is obtained.

Objective Magnification	5X	10X	20X	50X
WD (mm)	17.5	6.8	11.1	8.2

System Diagram of Optional Accessories

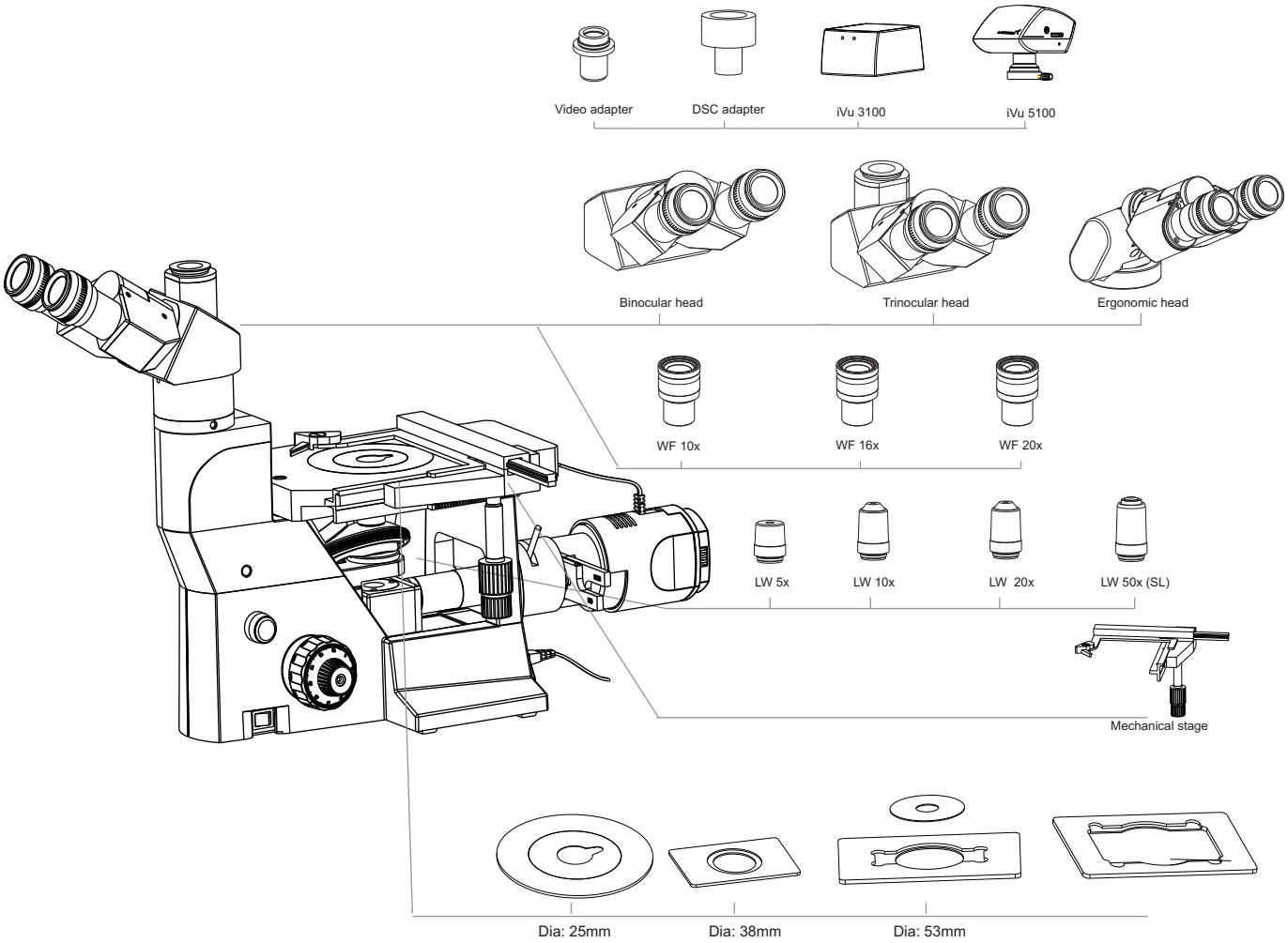

Installation and Operation of Optional Accessories

1 iVu Camera Module System

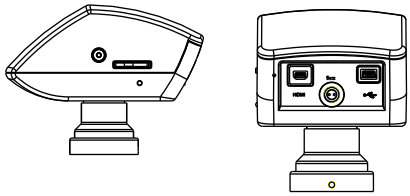

Side View Back View

Fig. 15

1. Mount the Video adapter ½" (Ref. t # 3143300-712) on Trinocular observation head.
2. Mount iVu Camera Module System on video adapter.

14 Care & Maintenance

Your microscope has been engineered for a long and safe operational life with the least amount of maintenance required. In general, routine maintenance is limited to keeping the microscopes working parts lubricated and optics clean. **Always cover the microscope with the provided dust cover when not in use.**

1. **Optical Cleaning:**
1. The objectives have been adjusted for a tight fit to prevent any damage during transportation. To remove an objective, rotate it counterclockwise while gripping it with a rubber sheet, etc. to avoid any slippage.
2. To clean the lens surfaces, remove dust using a soft brush or compressed air (cans available at your local electronics store). For removing finger marks or grease, soft cleaning cloth or lens tissue lightly moistened with cleaning solution (85% petroleum ether and 15% isopropanol) should be used. For cleaning the objective optics, use Methanol. Observe sufficient caution in handling Methanol. Place the objectives and/or eyepieces on a dust-free surface (e.g. aluminum foil). All other optical components to be cleaned should be as accessible as possible.
3.. Blow all loose dust particles away with compressed air or mini dust blower.
4. Remove all water-soluble dirt with distilled water. If this is unsuccessful repeat using a solution of diluted hand soap liquid. Remove any remaining residue with a dry cotton swab.
5. To remove oil, use a solution of diluted hand-soap liquid initially. If this does not produce a satisfactory result, repeat the cleaning using a solvent (Optical Cleaning Solution 85% petroleum ether and 15% isopropanol).
6. Grease must always be removed using a solvent.
7. Cleaning is achieved by using a spiral motion from the center to the rim. Never wipe using zig-zag movements as this will only spread the dirt. With larger optical surfaces (e.g. tube lenses) the spiral motion starts initially at the rim before moving to the middle and is then followed by a center to rim cleaning motion. Normally several spiral wipes are recommended.

   We recommend pure, volatile petroleum ether or Optical Cleaning Solution as explained in point 3 above.

zig-zag motion (X)

spiral motion (✓)

Wipe using a spiral movement. Do not use a zig-zag motion!

2. **Cleaning of painted surfaces :**
   Avoid the use of any organic solvent (e.g. thinner, xylene, ether, alcohol etc.) for cleaning of painted surfaces of the instrument. Painted surfaces can be cleaned with a very lightly moistened micro fiber cloth. Loose dust and other dirt particles can be removed using a soft bristle brush used exclusively for this purpose.

11 TECHNICAL SPECIFICATIONS SHEET

1. Illumination	Built-in Incident illumination system Halogen Lamp 6V-30W.			
2. Focusing mechanism turn	Stage height adjustment mechanism Fine adjustment scale: 0.002mm per graduation; Fine adjustment stroke: 0.2mm per Total stroke: 20mm Co-axial coarse and fine focusing on ball drive			
3. Revolving nosepiece	Quadruple positions fixed			
4. Observation tube		Binocular	Trinocular	Ergonomic
	Field number	22	22	22
	Tube tilting angle	30°	30°	0°to 25°
	Interpupillary distance adjustment range	52-75	52-75	52-75
5. Stage	Size	240 x 160mm		
	Movement range	78 x 54mm with Mechanical Stage.		
	Specimen holder	3 Different Shapes.		
7. Dimensions & Weight	495.0mm (L) x 300.0mm (W) x 470mm (H); 9.5 kg net			
8. Electrical	Lamp	Halogen, 6V-30W		
	Lamp life	up to 100 hours		
	Input	100V-240V AC, 50/60 Hz		
9. Operating environment	Indoor use Altitude: Max. 2000 meters Ambient temperature: 5° to 40°C (41° to 104° F) Maximum relative humidity: 80% for temperature up to 31°C (88°F), decreasing linearly through 70% at 34°C (93°F), to 50% relative humidity at 40°C (104°F) Supply voltage: 100 VAC TO 240 VAC Supply voltage fluctuations: Not to exceed ±10% of the normal voltage. Power consumption: 50W; Fuse: F5A/250V Power supply to the halogen lamp: 6V AT 30W Pollution degree: 2 (in accordance with IEC60664) Installation/Overvoltage category: II (in accordance with IEC60664) ⚠ CAUTION: HIGH VOLTAGE FUSE REPLACEMENT ⚠ WARNING: HIGH VOLTAGE POWER INLET ⏚ EARTH ⚠ WARNING: HIGH TEMPERATURE			

12 TROUBLESHOOTING GUIDE

Under certain conditions, performance of the unit may be adversely affected by factors other than defects. If problems occur, please review the following list and take remedial action as needed. In case of any other problem which cannot be rectified as below, please contact the service agents.

Trouble	Cause	Remedy
1. Although the Power is on, the field of view is dark.	The socket pin is not connected from the illumination column to the back of the instrument.	Connect it securely.
	The bulb is burned out.	Replace the bulb.
	The light intensity control is set to too low.	Set the illumination to desired position.
	The objective is not in position.	Make sure the objective is clicked properly.
	Fuse is blown.	Replace fuses (250V / 5 Amps)
2. Dirt or dust is visible in the field of view.	Dirt/dust on the specimen.	Clean the specimen.
	Dirt/dust on the eyepieces.	Clean them thoroughly.
3. Visibility is poor. - Image is not sharp. - Contrast is not sharp. - Details are indistinct.	The specimen is not correctly engaged.	Replace it with a clean specimen.
	The aperture iris diaphragm is opened or stopped down too far in brightfield observation.	Clean eyepieces gently. Adjust the aperture.
4. One side of image is blurred.	The revolving nosepiece is not correctly engaged	Make sure that the revolving nosepiece clicks properly into place.
	The specimen is not correctly mounted on the stage.	Place it correctly on the stage.
5. The bulb flickers and the brightness is unstable.	The line voltage fluctuates	Use a voltage stabilizer.
	The bulb is nearly burned out.	Replace the bulb.
	The power cord is not connecting securely.	Connect it securely.
6. The coarse adjustment knob is too difficult to rotate.	The tension adjustment ring is tightened too much.	Adjust it appropriately.
	The tension adjustment ring is loosened too much.	Tighten it appropriately.
7. The field of view of one eye does not match that of the other.	Incorrect interpupilary distance adjustment.	Adjust the interpupilary distance.
	Incorrect diopter adjustment.	Adjust the diopter.

www.laboamerica.com

Our policy is one of continuous development. Labo America, Inc., reserves the right to change design and specifications without prior notice.

Labo America Inc.
920 Auburn Court.
Fremont
CA 94538

U.S.A.
Telephone: 510 445 1257
Fax: 510 991 9862
sales@laboamerica.com

LABOMED and TCM 400 are registered trademarks of Labo America, Inc.
With a policy of continuous development, Labo America, Inc. reserves the right to change design and specifications without prior notice.

© 2009 Labo America, Inc. | 7125000-990A 12-2009

ISO 9001 : 2008
File No. A9020

Printed in U.S.A.