ERGOFLEX DENTAL STOOL (FOOT OPERATED)

User Manual

Dentistry

To ensure proper use of this Dental Stool as well as to avoid injury while operating, understanding this manual completely before use is highly recommended.

LIST OF CONTENTS

1. Introduction..... 1
2. Safety information..... 1
3. Product Description..... 2
4. Unpacking Ergoflex Dental Stool..... 3-4
5. User Instructions..... 5
   - 5.1 Seat Height Adjustment
   - 5.2 Armrest width adjustment
   - 5.3 Swivel adjustment of Armrest
   - 5.4 Backrest tilt & height adjustment
6. Service & Maintenance..... 6
7. Technical Specifications..... 7
8. Warranty..... 8

1. INTRODUCTION

A Dental Stool is important equipment in a Dental Practice. It should be compatible, ergonomic, adjustable and durable.

The Labomed "Ergoflex" dental stool is foot operated designed anatomically with a Therapeutic contoured seating system with an angle of 110 degree for better weight distribution and a balanced posture with natural lower back curve by reducing dise pressure. Waterfall design of front edges is helpful to reduce pressure on the back or thighs. Contoured Back Rest is designed carefully to provide optimum support to lumbar area with high degree of comfort. Free motion elbow supports allow freedom of motion with Radial adjustment. User can also adjust heigh of arm rest for complete support of Arms and shoulders to reduce muscular tension & fatigue. Arm rests further enhances comfort with horizontal adjustments according to the Physical requirement of user.

A pneumatic cylinder provides vertical seat adjustment from 20 to 27 inches according to need of user. Backrest height is adjustable through a knob and backrest tilt is adjusted through a lever conveniently positioned under seat with an easy approach.

ergoFlex upholstery fibre is made with highly UV-stable pigments, making it resistant to fading and degrading. Fabrics are also engineered to resist mold and mildew.

2. SAFETY INFORMATION

The primary concern is that the stool is operated and maintained with the safety of the patient and health care staff in mind. To ensure safe and reliable operation:

- Read and understand all instructions in this manual before attempting to install or operate the unit.
- Ensure that appropriate personnel are informed on the manual contents. This is responsibility of the purchaser.
- Ensure that this manual is located near the stool.

Failure to follow instructions with these symbols could result in serious personal injury and/or damage to the unit.

Indicates an imminently hazardous situation which, if not avoided, will result in death or serious injury.

Indicates an potentially hazardous situation which, if not avoided, will result in death or serious injury.

Indicates a potentially hazardous situation which, if not avoided, could result in minor or moderate injury and/or

3. PRODUCT DESCRIPTION

ergoFlex Dental Stool (Product Code: A6137120)

1. Armrest Adjustment knob (Height, Rotation)
2. Armrest width adjustment screw
3. Push in plate for seat height adjustment
4. Backrest tilt adjustment lever
5. Backrest height adjustment knob
6. Backrest
7. Seat
8. Armrest
9. Footrest
10. Castors

4. UNPACKING - ERGOFLEX DENTAL STOOL

Ergo Flex is delivered in sub-assembled groups along with one Allen key (8mm). and one instruction / service manual.

1. Keep the main box straight as shown in Fig. 01 and open it.

Fig. 01

2. Remove the side corners and take out small Accessory box Fig.2 containing back rest and two arm rest .

Fig. 02

3. Remove one of the foam sheet from bottom and take out the two side arms . Fig 3.

Fig. 03

4. Take out the chair from main box Fig 4. Remove the poly bags wrapped. and cut out the Safety Strip .

Fig. 04

5. Open the small box and take out the back rest and arm rests. Fig 5.

Fig.05

4. UNPACKING - ERGOFLEX DENTAL STOOL

6. Assemble two side arms with the help of Allen key (8mm) provided. Fig 6.

Fig. 06

7. Assemble two arm rest and clamp with the knob . Fig 7.

Fig.07

8. Take the back rest and remove and cap and stopper plunger. Fig 8.

Fig.08

9. Assemble the back rest in the bracket 'A" Fig 9. and clamp the knob "B" at desired height

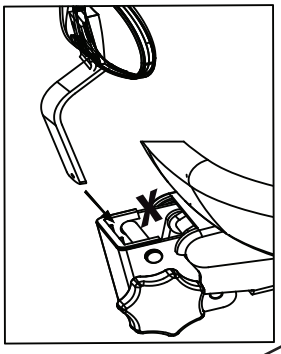

Bracket 'A"

(B)knob

10. Push back the stopper plunger and end cap as it was originally. Fig 10.

Fig.10

5. USER INSTRUCTIONS

5.1 Seat Height Adjustment: (with foot Padel)

1. ErgoFlex is packed to the lowest height adjustment, set it at desired height as per requirement by pressing foot Plate (A). To raise the seat, remove your weight from the seat and push in foot plate (A) again to extend height.Release pressure at the desired height.

2. To lower the seat height, sit on the chair and push in the foot plate (A). Release pressure from plate (A) to set the seat at desired height Fig.01.

3. Minimum height of dental stool 508 mm (20 inches), and can be extended upto 685 mm (27 inches)

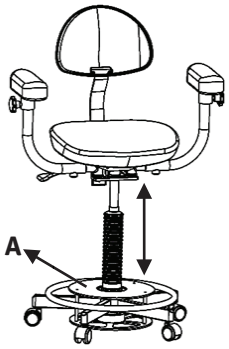

Fig. 01

5.2 Armrest Width Adjustment:

1. Loosen the screw (B) Fig. 02 on the swivel arm (C) under seat using Allen wrench 8 mm.(wrench 8.0mm is provided with each stool)

2. Slide out the swivel armrests (C) to adjust the width to fit the body size. Swivel armrest width at minimum is 533 mm (21 inches) and can be extended upto 736 mm (29 inches).

3. Loosen hand knob (D) to adjust the height of armrest at desired position and retighten the same. Armrest height can be adjusted upto 125 mm (5 inches). Armrests can also be angular adjusted to suit the armrest posture.

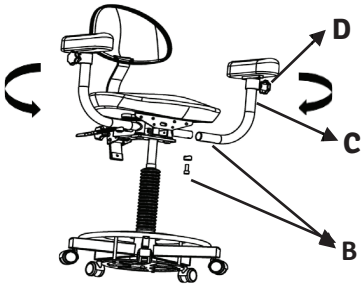

Fig. 02

5.3 Swivel Adjustment of Armrest:

1. Refer Fig. 02 B. Armrest can be swiveled & positioned to any position with in a radius of ± 50° as per user's convenience. It is preloaded with a torque such that it moves easily as and when needed without using any knob.

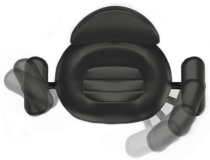

Fig.2 B

5.4 Backrest Tilt and height Adjustment:

1. To tilt the backrest, lift up the lever (E) Fig. 03 to adjust the desired sitting posture and then release the lever.

2. To raise or lower the backrest, loosen knob (F) and slide the backrest up or down to the desired level.

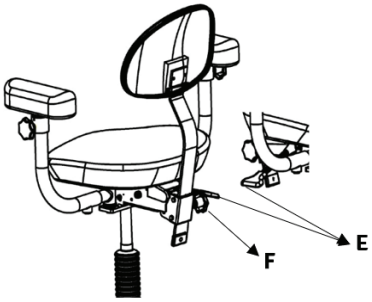

Fig. 03

6. SERVICE & MAINTENANCE

Caution

The upholstery material is resistant to most medicinal type stains, but may be damaged by iodine, solvents and dyes. Remove any spilled fluids on the upholstery immediately.

Caution

Failure to perform periodic inspections of the stool could result in personal injury or stool damage.

Preventive Maintenance:

1. Periodically engage and disengage to check activation of backrest lever to make sure it securely lock in place.
2. **Upholstery cleaning**

A. For light Soiling:

i. A Solution of 10% household liquid dish soap with warm water applied with a soft damp cloth will remove most soiling.

ii If necessary, use a solution of liquid cleanser and water applied with a soft bristle brush. Wipe away the residue with a warm damp cloth.

B. For more difficult stains not removed by the above method:

1. Dampen a soft white cloth with a solution of household bleach (sodium hypochlorite); 10% bleach, 90% water.
2. Rub gently.
3. Rinse with a water dampened cloth to remove residual bleach.

All surfaces should be cleaned with in your facility's guidelines concerning an timicrobials and blood borne pathogens.

3. **Castor Care:**
   To prevent soil build-up, clean casters periodically with a mild soap and warm water.

4. **Bellows Cleaning:**
   The plastic bellows should be periodically cleaned with a mild soap and warm water or with a commercial rubber cleaner.

7. TECHNICAL SPECIFICATIONS

1.	Seat Height	Minimum-508 mm (20 inches), Extension upto -685 mm (27 inches)
2.	Backrest Tilt	0°-25°
3.	Adjustable Back rest Height	254 mm (10 inches)
4.	Armrest Height Adjustment	125mm (5 inches)
5.	Armrest Width Extension	Minimum-533 mm (21 inches), Extension upto -736 mm (29 inches)
6.	Armrest radial adjustment:	±50°
7.	Base Diameter	599 mm (22 inches)
8.	Fabric Colour	Beige, black, grey, maroon, navy blue
9.	Net Weight	22Kg
10.	Seat System Design	Contoured waterfall design with 110° angle
11.	Pneumatic Cylinder	Made with anticorrosive steel
12.	Load	minimum 45 kg , maximum 150 kg
13.	Upholstery	High density PU foam,
14.	Base & Armrest	Made from high polished anti rust stainless steel
15.	Packed weight	30kg
16.	16 package dimensions	63*63*60 cm

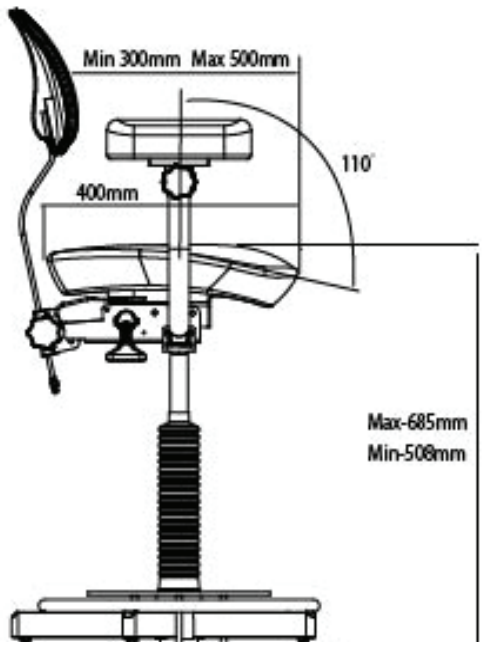

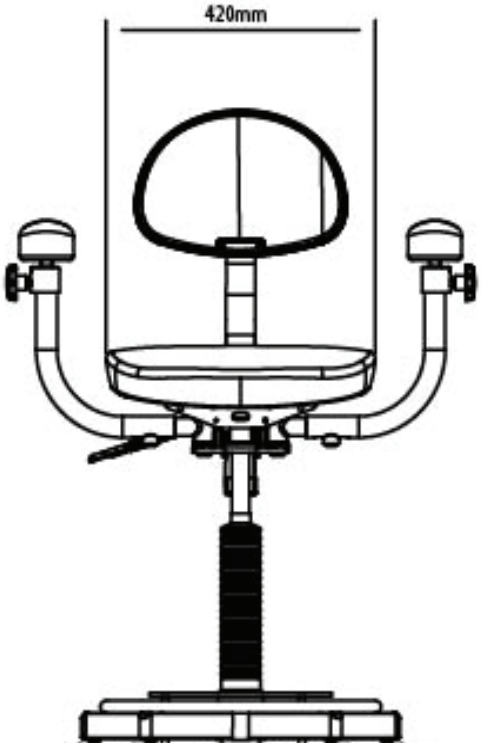

8. WARRANTY

This product is warranted by LABOMED against defective material and workmanship under normal use for a period of one year from the date of invoice to the original purchaser. (An authorized dealer shall not be considered the original purchaser). Under this warranty, LABOMED's obligation is to repair or replace the defective part or product at LABOMED's discretion.

This warranty applies to new products and does not apply to a product that has been tampered with, altered in any way, misused, damaged by accident or negligence, or which has had the serial number removed, altered, or effaced. Nor shall this warranty be extended to a product installed or operated in a manner not in accordance with the applicable LABOMED instruction manual, nor to a product which has been sold, serviced, installed, or repaired other than by a LABOMED.

All claims under this warranty must be in writing and directed to the LABOMED factory or its authorized dealer for this device making the original sale and must be accompanied by a copy of the purchaser's invoice.
This warranty is in lieu of all other warranties implied or expressed. All implied warranties of merchantability or fitness for a particular use are hereby disclaimed. No representative or other person is authorized to make any other obligations for a LABOMED product. LABOMED shall not be liable for any special, incidental, or consequent damages for any negligence, breach of warranty, strict liability, or any other damages resulting from or relating to design, manufacture, sale, use, or handling of the product.

PRODUCT CHANGES
LABOMED reserves the right to make changes in design or to make additions to or improvements in its products without obligation to add such to products previously manufactured.

CLAIMS FOR SHORTAGES

We use extreme care in selection, checking, rechecking, and packing to eliminate the possibiti-ty of error.If any shipping errors are discovered:
1. Carefully go through the packing material to be sure nothing was inadvertently overlooked when the unitwas unpacked.

2. Call the dealer you purchased the product from and report the shortage. The materials are packed at the factory and none should be missing if the box has never been opened.

3. Claims must be filed with in 30 days of purchase.

CLAIMS FOR DAMAGES IN TRANSIT

Our shipping responsibility ceases with the safe delivery in good condition to the transportation company. Claimsfor loss or damage in transit should be made promptly and directly to the transportation company. Ir, upon delivery, the outside of the packing case shows evidence of rough handling or damage, the transportation company's agent should be requested to make a "Received in Bad Order" notation on the delivery receipt. If within 48 hours of delivery, concealed damage is noted upon unpacking the shipment and no exterior evidence rough handling is apparent, the transportation company should be requested to make out a "Bad Order" report. This procedure is necessary in order for the dealer to maintain the right of recovery from the carrier.

Labo America Inc.
920 Auburn Court
Fremont, CA
94538
U.S.A.

Phone: 510-445-1257
Fax: 510-991-9862
Email: sales@laboamerica.com
www.laboamerica.com

EU REP.

Labomed Europe
Essebaan 50
NL-2908 LK Capelle a/d IJssel
The Netherlands
Tel: +31 (0)10 4584222
Fax: +31 (0)10 4508251
E-mail: info@labomedeurope.com

A16372 ISO 13485 : 2016
LABOMED