LABOMED
ideas for vision

Lx 500
User Manual

Research Microscopy

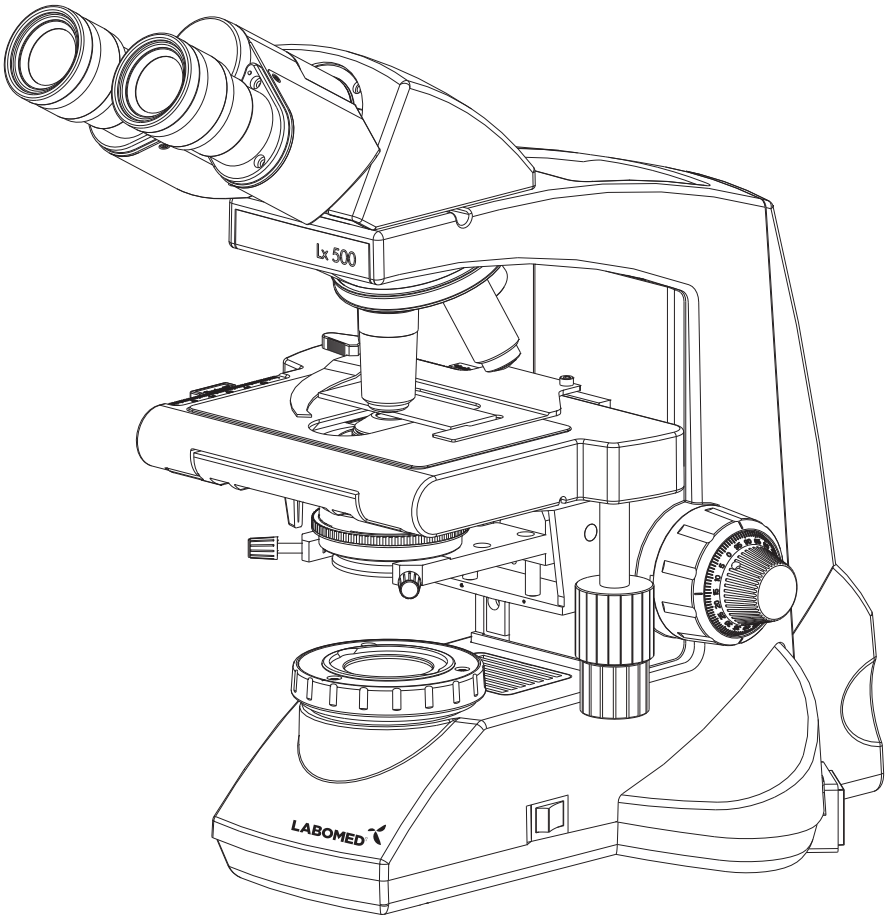

To ensure proper use of this instrument as well as to avoid injury while operating instrument, understanding this manual completely before use is highly recommended.

Lx 500 is a trade name for LABOMED Products.

LABOMED is a registered trademark of Labo America, Inc.

All other trademarks are the property of their respective owners.

The information contained in this document was accurate at the time of publication. Specifications are subject to change without notice. Labo America reserves the right to make changes to the product described in this user manual without notice and without incorporating those changes in any products already sold.

No part of this publication may be reproduced, stored in a retrieval system, or transmitted in any form or by any means: electronic, mechanical, recording, or otherwise, without the prior written permission from Labo America.

List Of Contents

1.	Introduction	4
2.	Safety Information	5-7
3.	Lx 500 Binocular	8
4.	Lx 500 Trinocular	9
5.	Lx 500 Ergonomic	10
6.	Standard Components	11
7.	Optional Accessories	12-13
8.	Initial Setup	14
9.	Assembly	15-16
10.	Summary of Brightfield Observation Procedure	17
11.	Detailed Observation Procedure	18-22
12.	Troubleshooting Guide	23-24
13.	Specifications	25

1 INTRODUCTION

The Lx 500 is a research microscope with a modern design and the latest in optical and mechanical advancements. Designed for professionals as well as clinicians, the microscope offers many features and functions for a diverse set of applications. Here are some of the benefits of the Lx 500.

Extra clarity and contrast is provided through a 360° rotatable Binocular/ Trinocular body inclined at 30° with IPD adjustment. A 0-30° tiltable ergonomic head is provided for adjustable viewing height according to the user's height, enhancing the user's comfort.

The stand consists of a ball bearing, low-friction focusing mechanism.

The sturdy, modern design provides a high degree of comfort and stability.

The high-powered objectives are spring loaded to prevent accidental damage to specimen slides.

The reverse angle quadruple nosepiece has a comfortable ribbed grip for easy rotation that also safeguards the turret system against any damage. All positions are par-centered and parfocalised ensuring the highest level of accuracy.

The ball bearing mechanical stage provides a smooth surface over a 76 x 50 mm area with spring loaded stage clamps for retaining the specimen at the desired position. A 0.1 mm vernier scale aids in measurement.

High power illumination is delivered through our Universal Power Supply operable within a range of 100V - 240V AC input. This ensures continuous operation even under flactuating voltage environments.

The Halogen bulb (6V-30W) has an average life span of up to 500 hours. The LED has an average life of 50,000 hours.

The Lx 500 comes equipped with a removable flip top N.A. 1.25 Abbe condenser with aspheric lens for brighter illumination levels, and an iris diaphragm for better resolution and contrast control.

2 SAFETY INFORMATION

1 After the microscope has been used for observation of a specimen containing bacteria, clean any surfaces that came in contact with the specimen to prevent infection.

Be sure to remove the specimen before moving the product.
In case the specimen is damaged through erroneous operation, it is important to clean all surfaces that may have come in contact with the specimen.

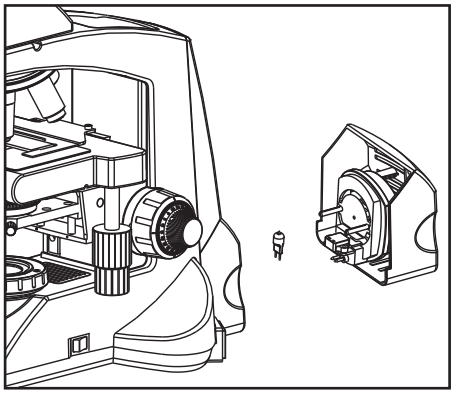

Fig 1

Applicable to 6V-30W Halogen bulb (P/N EL-455)

2. Install microscope on a sturdy, level table or bench and avoid any restriction of air vents in the base of the unit. Do not place microscope on a flexible surface, as this could result in blocking the air vents and cause overheating.
3. Always use the power cord provided. If the proper power cord is not used, product safety and performance cannot be warranted.
4. When installing the microscope, route the power cord away from the microscope frame. Should the power cord come in contact with the microscope base, the power cord could melt due to over exposure to heat.
5. Always ensure that the grounding terminal of the microscope and that of the wall outlet are properly connected. If the unit is not grounded, LABOMED cannot warrant electrical safety.
6. Never allow metallic objects to penetrate the air vents of the microscope frame as this could result in user injury or damage to the microscope.
7. After operation, be sure to disconnect power cord from connector socket of the microscope and/or from the wall power outlet.

Safety Symbols

The following symbols are found on the microscope. For optimal use, it is recommended that users understand these symbols and always use the equipment as prescribed

Symbol	Explanation
⚠	This surface has a tendency to heat up and should not be touched unless system has completely cooled down.
⚠	Before use, carefully read the instruction manual. Improper use could result in injury to the user and/or damage to the equipment.
⚠	Warning against risk of electric shock
I	Main switch is ON
O	Main switch is OFF

Caution

If the microscope is used in a manner not specified by this manual, the safety of the user may not be warranted. In addition, the equipment may be damaged. Always use the equipments as outlined in this instruction manual.

1. Getting Started

1 A microscope is a precision instrument with delicate glass components. Please handle with care.
2. Do not use the microscope where it is subjected to direct sunlight, high temperature, humidity, dust and vibrations. (For the operating conditions, see chapter 13,"SPECIFICATIONS")
3. The microscope is ventilated by natural convection. Be sure to leave enough space (10 cm or more) around the body.
4. Arm handle is provided for carrying the microscope.
To prevent damage, do not hold the microscope by the stage or observation tube.
Be sure to remove the specimen from the stage clip before transporting the unit to avoid damage to the specimen slide.

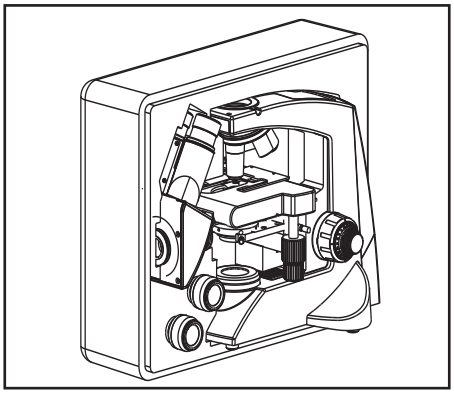

Fig 2

2. Maintenance and Storage

1. Clean all glass components by wiping gently with cleaning cloth provided. To remove fingerprints or oil smudges, wipe with cleaning cloth slightly moistened with a mixture of Petroleum (85%) and Isopropanol (15%)
Since solvents such as petroleum and isopropanol are highly flammable, they must be handled carefully. Be sure to keep these chemicals away from open flames or potential sources of electrical sparks- for example, electrical equipment that is being switched "ON" or "OFF". Also remember to always use these chemicals only in a well-ventilated room.
2. Do not attempt to use organinc solvents to clean the microscope components other than the glass components. To clean non-glass components, use a lint-free, soft cloth slightly moistened with a diluted neutral detergent.

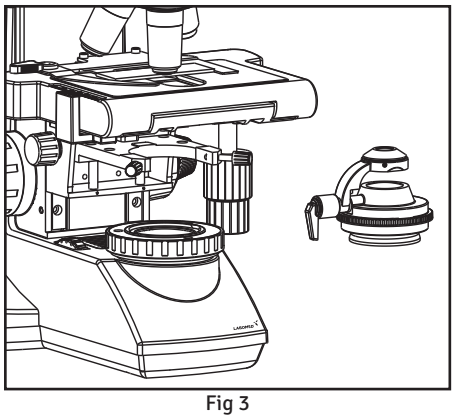

Fig 3

3. Do not disassemble any part of the microscope as this could result in malfunction or mitigated performance.
4. When not using the microscope, ensure that the frame is fully cooled before storing the unit or covering it with the dust cover (provided).
5. To clean the condenser, fully loosen the securing knobs and remove the condenser then wipe the front lenses of the condenser with optical cleaning solution (mixture suggested above) and lens tissue.
The condenser can be re-attached by replacing it in its seat, tightening securing knobs, and raising the condenser bracket to the desired position.
6. Be sure to observe your local rules/regulation for product disposal.

• 3. Care and Maintenance

Your microscope has been engineered for a long and safe operational life with minimal maintenance required. In general, routine maintenance consists of keeping the microscope's working parts lubricated and optics clean. Always cover the microscope with a dust cover when not in use.

Optics Cleaning

1. The objectives have been adjusted for a tight fit to prevent any damage during transportation. To remove an objective, rotate it counterclockwise while gripping it with a rubber sheet to avoid any slippage.

2. To clean the lens surfaces, remove dust using a soft cloth or compressed air (cans available at your local electronics store). For removing finger marks or grease, a soft cleaning cloth or lens tissue lightly moistened with cleaning solution (85% Petroleum ether and 15% Isopropanol) should be used. For cleaning the objective optics, use Methanol. Observe sufficient caution in handling Methanol. Place the objectives and/or eyepieces on a dust-free surface.

3. Blow all loose dust particles away with compressed air or small dust blower.

4. Remove all water-soluble dirt with distilled water. If this is unsuccessful, repeat using a solution of diluted liquid hand soap. Remove any remaining residue with a dry cotton swab.

5. To remove oil, use a solution of diluted liquid hand soap initially. If this does not produce a statisfactory result, repeat using a solvent (optical cleaning solution 85% Petroleum ether and 15% Isopropanol)

6. Grease must always be removed using a solvent.

7. Cleaning is acheived by using a spiral motion from the center to the rim. Never wipe using zig zag movements as this will only spread the dirt with larger optical surfaces (e.g tube lenses) the spiral motion starts initially at the rim before moving to the middle and is then followed by a center to rim cleaning motion. Several spiral wipes are recommended.

We recommended pure, volatile petroleum ether or optical cleaning solution as explained above.

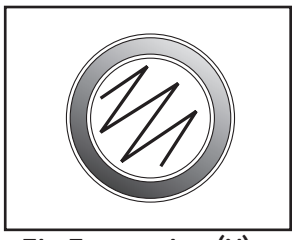

• Zig Zag motion (X)

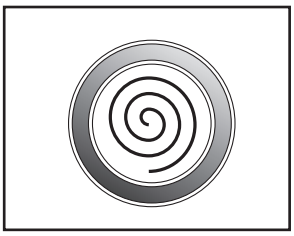

• Spiral motion(✓)

Wipe using a spiral motion . Do not use a zig zag motion!

Cleaning of painted surfaces:
Avoid the use of any organic solvent (e.g. thinner, xylene, ether, alcohol etc.) for cleaning of painted surfaces of the instrument. Painted surfaces can be cleaned with a lightly moistened micro-fiber cloth. Loose dust and other dirt particles can be removed using a soft bristle brush.

3 Lx 500 BINOCULAR

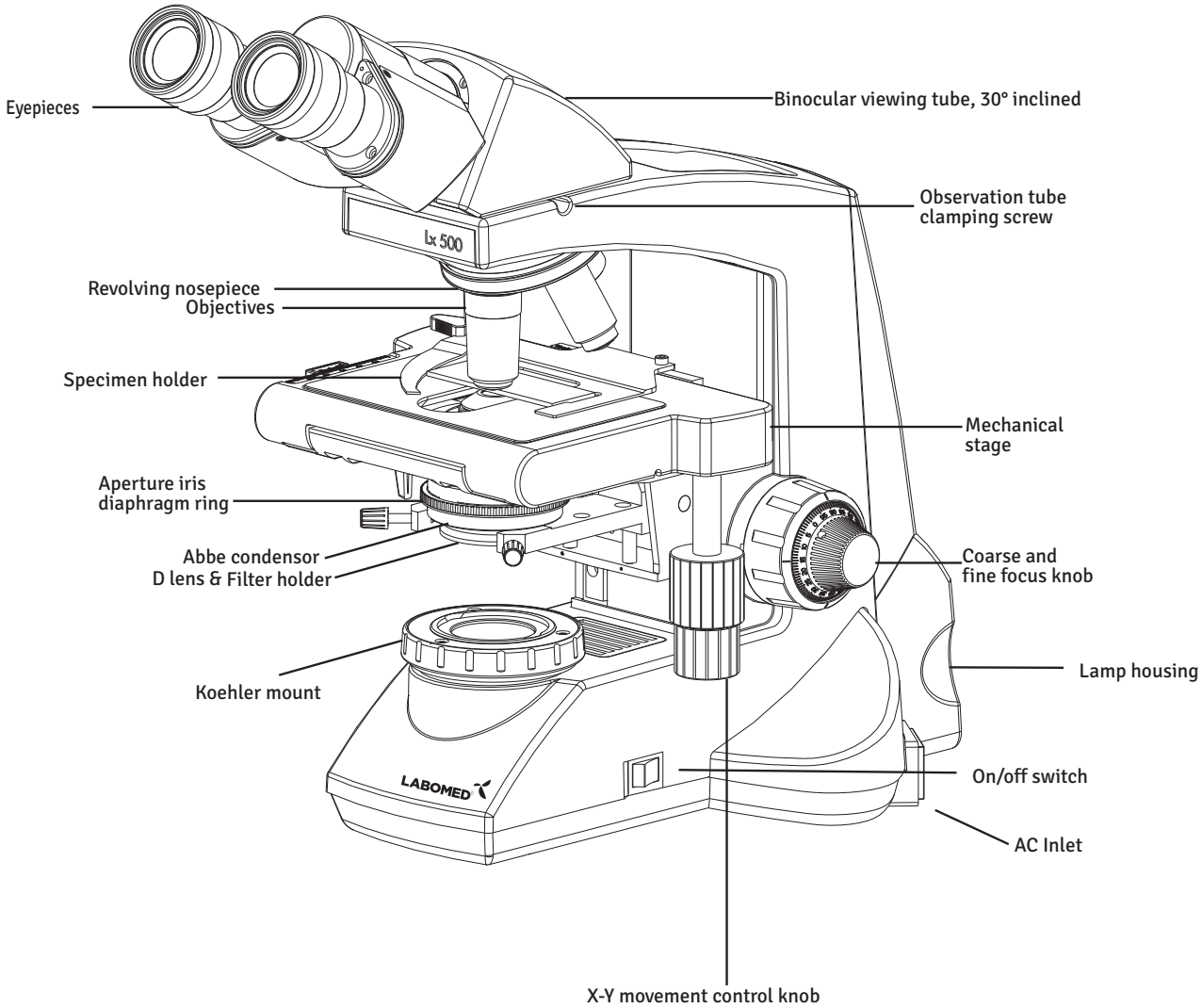

4 Lx 500 TRINOCULAR

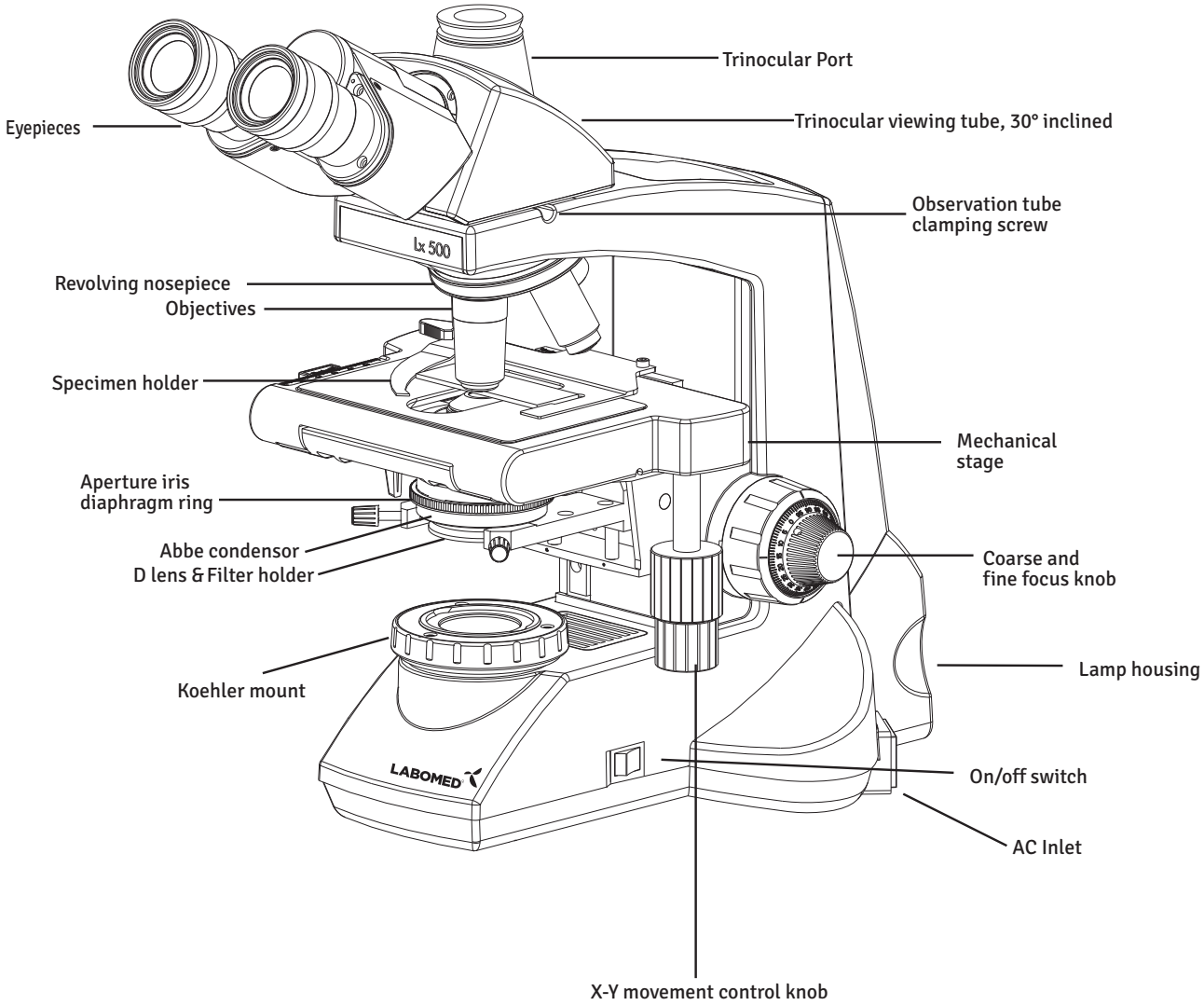

5 Lx 500 ERGONOMIC BINOCULAR

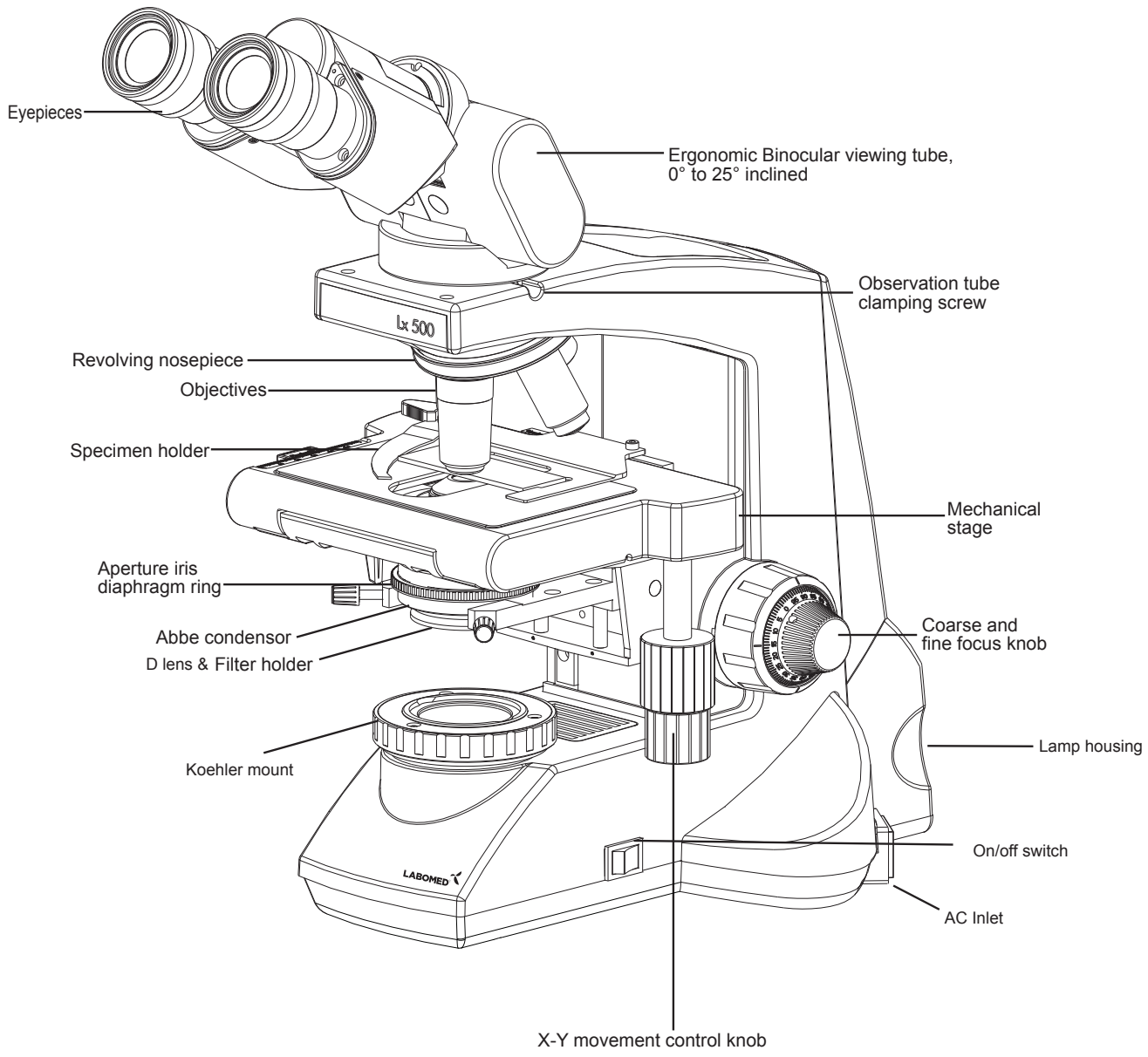

6 STANDARD COMPONENTS

After removing your microscope from its packaging, you may observe the following contents. Please note that the contents of your microscope may vary as the configuration, contrasting method or viewing body ordered may not be of the standard configuration highlighted here.

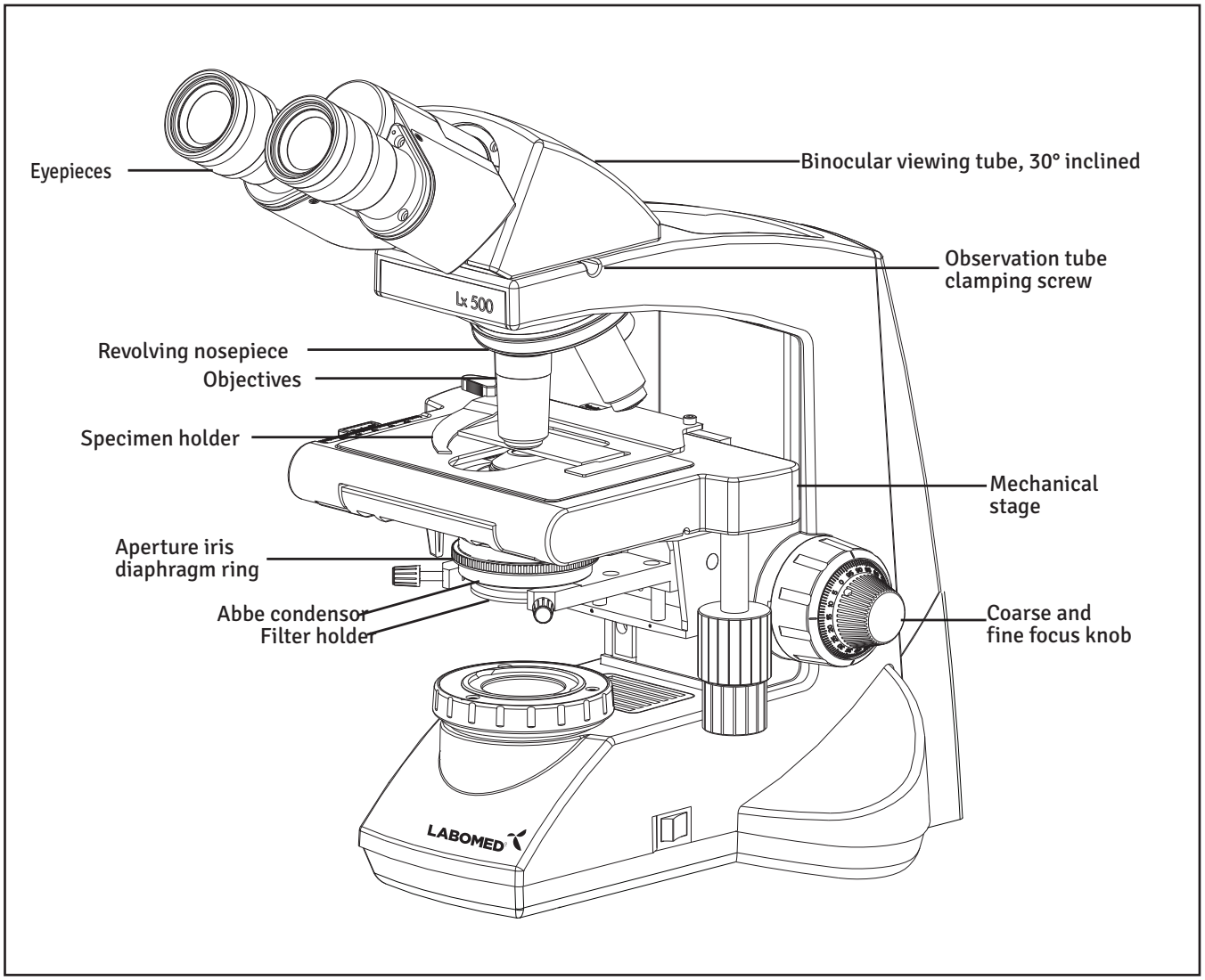

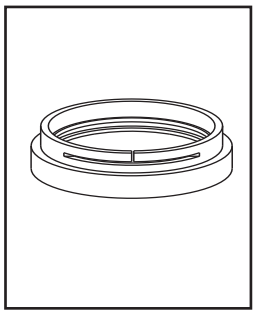

Daylight Blue Filter

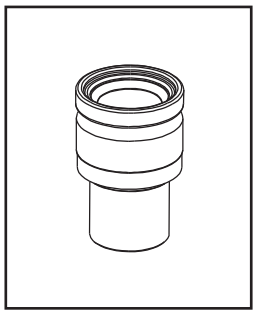

Paired Eyepieces

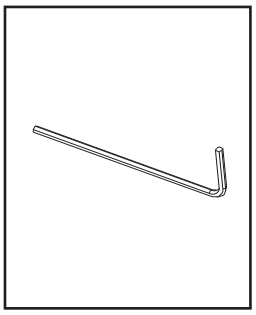

Allen Wrench 3mm

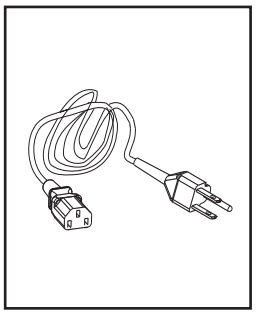

Power Cord

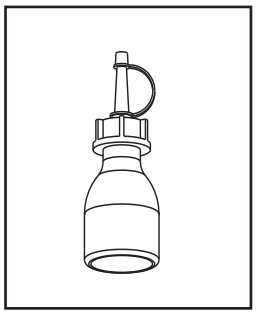

Immersion Oil

7 OPTIONAL ACCESSORIES

• System Diagram Of Optional Accessories

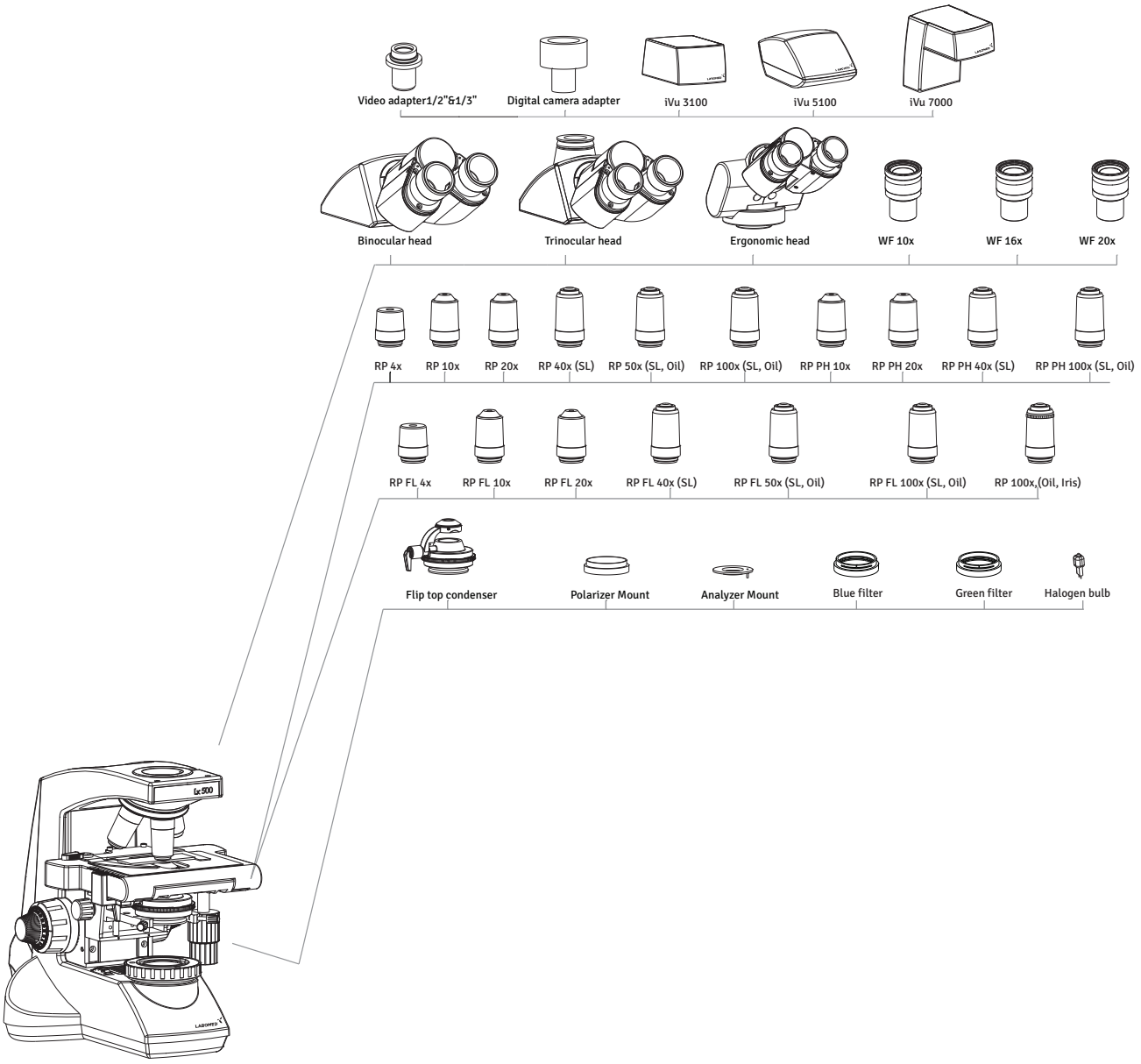

• Installation and Operation of Optional Accessories

1. iVU Camera Module System

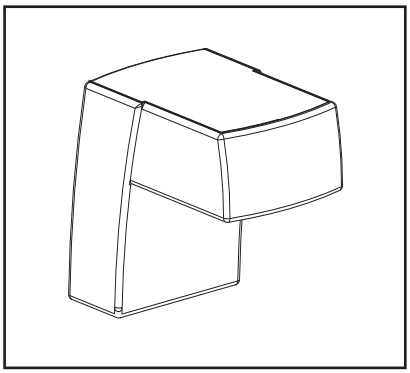

Fig 4

1.Mount the video adapter 1/2" (part # 3143300-912) on Trinocular observation head.
2. Mount iVu Camera Module System on video adapter.

2. Optional Eyepieces

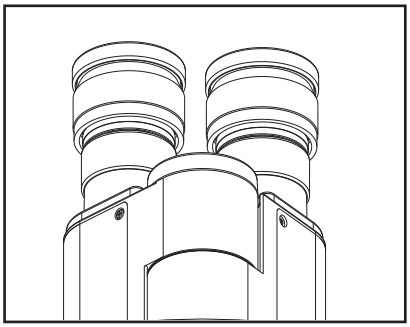

Fig 5

10X eyepieces are provided. To replace:
1. Pull out the 10x eyepieces from the observation head's ocular tube.
2. Insert desired eyepieces in empty ocular tube.

3. Phase Turret

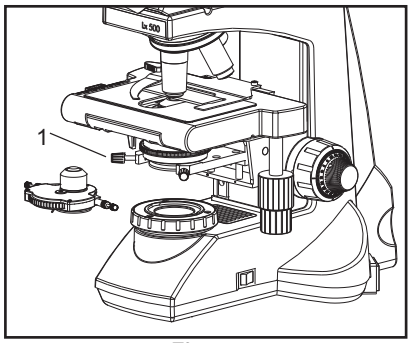

Fig 6

1. Remove the condenser from its position by loosening the two thumb screws (1) on both sides of the condenser as shown in Figure 6.
2. Place the phase annulus turret in position from where the condenser has been removed.
3. The long "push to engage" thumbscrews on both sides of the phase turret are provided for proper alignment of the phase ring. By disengaging these screws, the phase turret can be adjusted at any desired phase annulus (10x, 20x, 40x and 100x) by turning the thumbwheel to the desired position. There is also a '0' setting on the thumbwheel for bright field application.

Note: Refer to the user manual provided with the Phase Contrast kit for centering and alignment.

8 INITIAL SETUP

1. Objectives

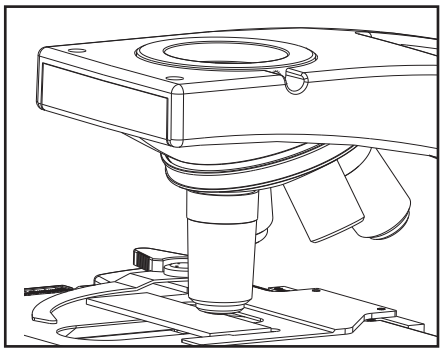

Fig 7

Objectives are factory set. They are par-centered and parfocalized during assembly.

All Objectives have been secured for a tight fit to prevent them from coming loose during transit. To remove an objective, rotate it counter clockwise while holding it with a rubber grip to avoid any slippage.

2. Observation Head

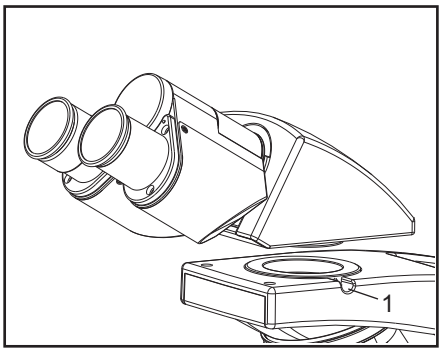

Fig 8

Install the observation head using the following procedure:
1. Using allen wrench 3mm (provided), loosen the head locking screw (1) and remove the dust cover cap provided in dovetail cavity as well as on observation head dovetail.
2. Mount the observation head by engaging the dovetail provided at the bottom of the head into the dovetail cavity provided in the microscope arm.
3. Tighten the head locking screw (1) after positioning the observation head as desired. See Figure 8.

3. Eyepieces

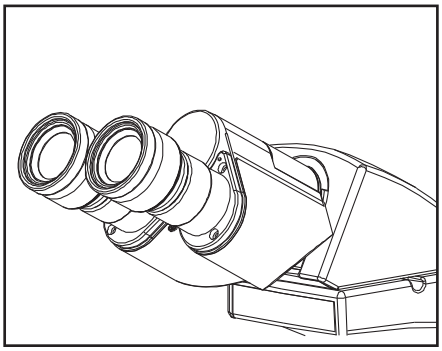

Fig 9

Insert the eye pieces into the ocular tube of the observation head using the following procedure:
1. Remove the protective caps from the observation tube.
2. Insert 10x eyepieces into the spring loaded eye tubes to prevent undesired rotation of eyepieces. See Figure 9.

9 ASSEMBLY

Each standard unit can be assembeled by simply attaching the observation head, eyepieces and power cord.

1. Installing or Replacing the Bulb

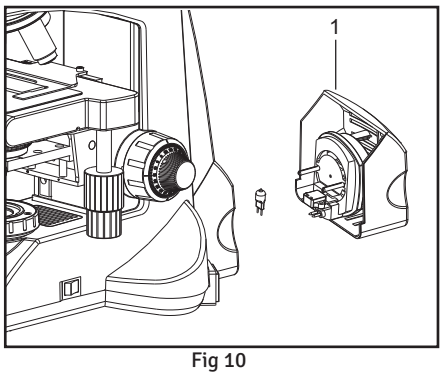

Fig 10

First, remove the parts that may drop, such as the filter and specimen, from the microscope frame and place the microscope in its back so that the bottom plate is exposed.

1. Pull out the lamp house cover (1).
2. Remove existing bulb (if any) from the lamp holder and attach new bulb.
3. Replace the lamp house cover.

Always use the designated bulb. Using bulbs other than those specified by LABOMED may lead to a fire hazard and decentering of light.

Note: Finger prints or stains on the lamp bulb reduce its life.

If contamination of the bulb occurs, wipe bulb surface with a cloth slightly moistened with alcohol.

Caution: For bulb Replacement During Use or Right After Use

The bulb, lamp socket and surrounding areas will be extremely hot during and right after use. Set the main switch to "O"(OFF), disconnect the power cord from the wall outlet, and allow the bulb and lamp socket to cool before replacing the bulb. Cooling time will vary.

2. Fuse Replacement

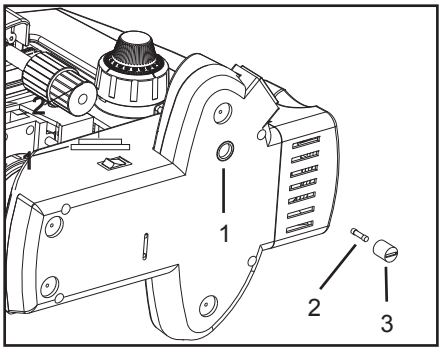

Fig 11

Before replacing the fuse, remove the parts that may drop, such as the filter and specimen, from the microscope frame. Turn the microscope to expose the base plate so that fuse holder is visible.

1. Use a flat head screw driver to open the fuse holder (1).
2. The fuse holder(3) will come out with dead fuse.
3. Replace the dead fuse (2) with the live fuse.
4. Re-engage the fuse tray.

Always use the designated fuse. Using a fuse other than that specified by LABOMED may lead to a fire hazard.

Caution: For fuse replacement.

Set the main switch to "O" (OFF) and disconnect the power cord from the wall outlet.

3. Mounting the Daylight (Blue) Filter

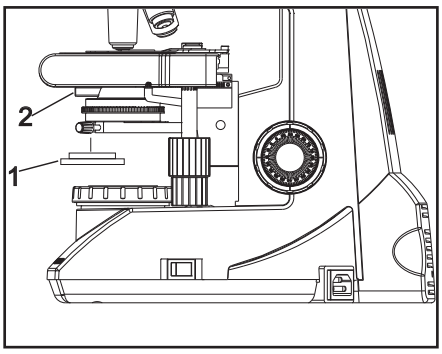

Fig 11a

This filter modifies the color of observation light to a natural (daylight) color.

Fit the filter (1) into the bottom of the condenser (2) until it clicks into place. (Figure 11a).

4. Procedure for LED Replacement

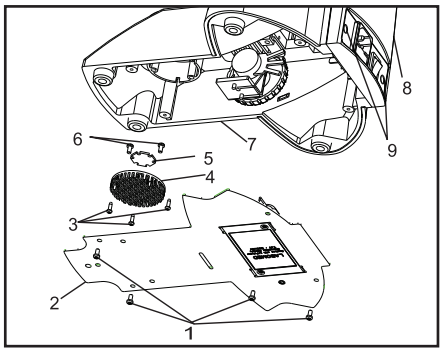

Fig 12

- Screws SS 658
- Base plate 9144000-815
- Screws heat shield SS 714
- Heat shield 9135000-524
- Star LED 9135000-901
- LED screws SS 658
- Stand
- Back cover plate (9126000-102) & electrical panel (91260000-103)
- Decorative cap 8123000-202

Figure 12

1. Lay the microscope on its back on a clean surface to expose the base plate.
2. Remove the two decorative caps (9) from back cover plate.
3. Using a phillips screw driver, unscrew two screws (9) to detach back cover plate from stand.
4. Using phillips screw driver, unscrew four screws (1) to open the bttom plate of the microscope.
5. Cut LED wire holding tie and detach LED wire connector from PCB mounted on back cover plate.
6. Detach heat shield from critical mount by opening 3 screws (3) with phillips screw driver.
7. Detach LED from heat shield by loosening 3 screws (6).
8. Replace new LED on heat shield and connect wire connections to PCB.
9. Reverse steps 6 to 1, to complete the process.

Applicable LED replacement: LED P/N 9144000-901

5. Procedure for LED Battery Replacement

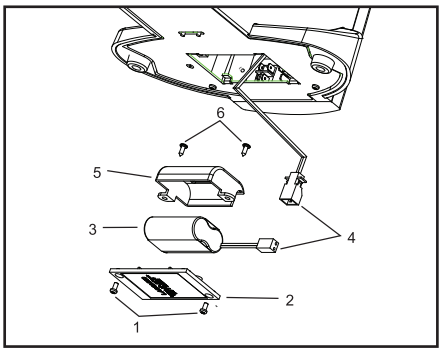

Fig 12a

- Screws for battery cover bottom SS 658
- Battery cover bottom 9135100-204
- Battery 9135000-903
- Cable clamp EL-488
- Battery cover led 9135100-201
- Screws battery (cover) SS 658

Figure 12a

1. Lay the microscope on its back a on clean surface to expose base plate.
2. Using phillips screw driver, unscrew four screws (1) to open the battery cover from bottom plate.
3. Detach connector of connecting wires (4).
4. Remove two screws (6) provided on battery clamp with phillips screw driver.
5. Replace existing battery with new battery from Labomed (refer part no. below).
6. Reverse steps 5 to 1, to complete the process.

Applicable LED battery replacement:LED (battery) P/N 9144000-903

10 SUMMARY OF BRIGHTFIELD OBSERVATION PROCEDURE

Flip the main switch to “ON”

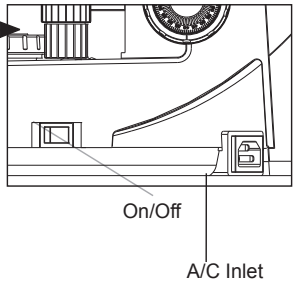

↓

Place the specimen on the stage.

↓

Engage the 10X objective in the light path.

↓

Bring the specimen in focus.

- Adjust the observation tube and eyepieces
  Adjust the interpupillary distance.
  Adjust the dioptric setting.

↓

Adjust the aperture iris diaphragm.

↓

Engage the objective to be used in the light path and bring the specimen in focus.

- Engage the required filters.
- Adjust the brightness.

↓

Observe Specimen.

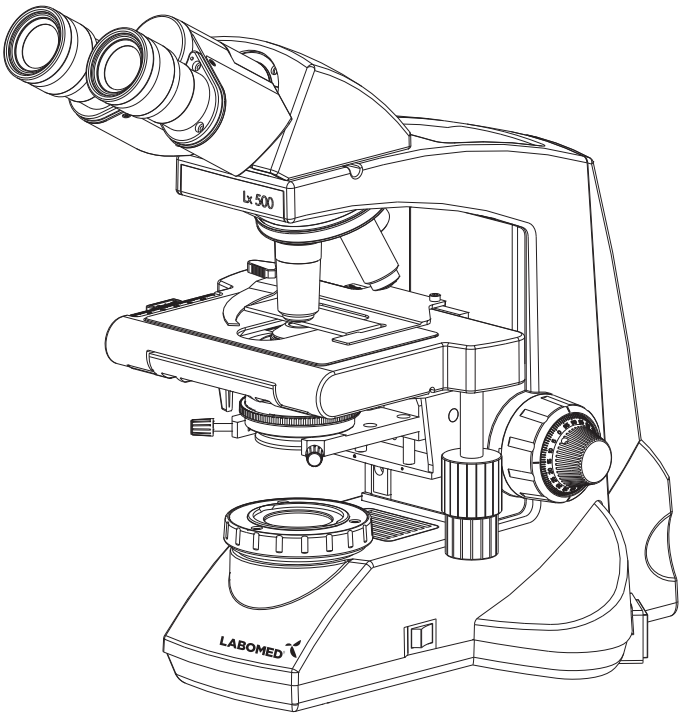

11 DETAILED OBSERVATION PROCEDURE

1. Turning the Lamp ON

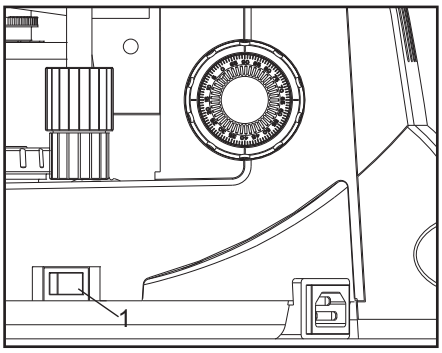

Fig 13

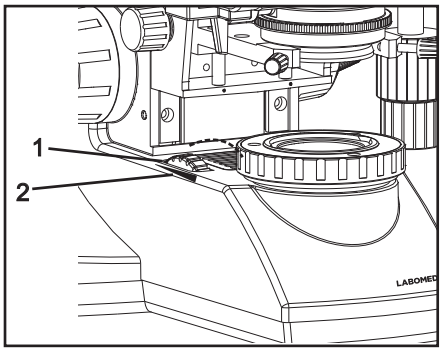

Fig 14

1. Flip the main switch to "I" (ON) as shown in Figure 13.
2. Rotating the light intensity adjustment knob in Figure 14 (1) in the direction of the arrow increases brightness and rotating knob in the opposite direction decreases brightness. The intensity bar next to the knob in Figure 14 (2) indicates the direction of intensity level.

2. Placing Specimen on the Stage

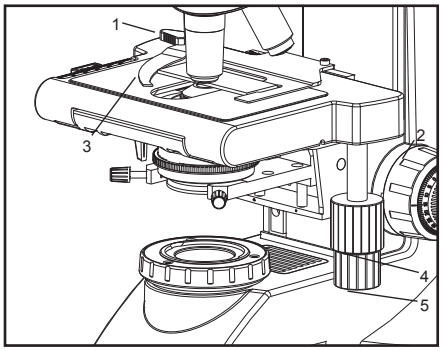

Fig 15

1. Rotate the coarse adjustment knob (2) in counter clockwise direction to fully lower the stage.
2. Open the bow-shaped lever (3) outward by pulling on lever handle (1), place the specimen by sliding the specimen glass plate(s) on the stage from the front toward the slide seat at the rear.
3. After positioning your specimen slides, (2 max) return the bow shaped lever (3) gently by slowly releasing control knob (1).
4. Rotating the upper co-axial knob controlling the Y-axis movement (4) moves the specimen in the vertical direction.Rotatingthe lower knob (5) moves the specimen in the X-axis or horizontal direction.

Do not adjust the specimen holder directly by hand. This will damage the rotation mechanism. When the specimen holder reaches the stop position, the rotation force of the X/Y knobs becomes stiff. Stop rotating at this point.

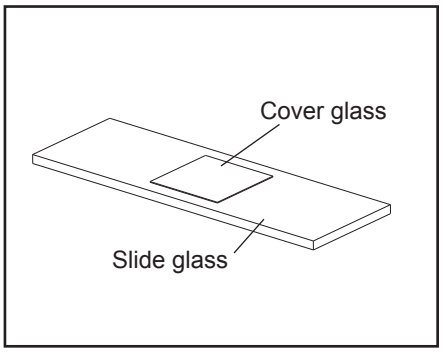

Fig 16

Cover Glass
This is the glass plate placed on the specimen. For optimum optical performance, the cover glass thickness, which is the distance from its top surface to the specimen surface, should be 0.17 mm.

Slide Glass
This glass plate should ideally have a length of 76 mm, width of 26 mm ± 1 mm and thickness between 0.9 and 1.4 mm.

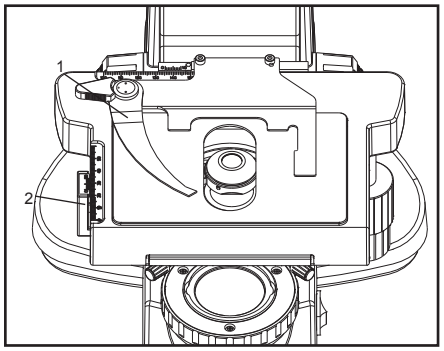

Fig 17

Vernier Scales
These scales allow for easy identification of the specimen's position (coordinates), making it easy to return to a particular region of interest after scanning the slide. (Fig 17)
1. The horizontal coordinate can be read at position (1) on the specimen holder.
2. The vertical coordinate can be read at the index line (2).

3. Adjusting the focus

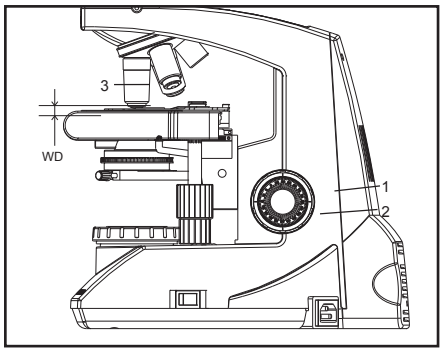

Fig 18

Focusing Procedure
1. Rotating the coarse adjustment knob (1) clockwise so that the objective (3) is as close as possible to the specimen (we recommend starting with 10X).
2. While observing the specimen through the eyepiecs, slowly rotate the coarse adjustment knob (1) counterclockwise to lower the stage.
3. When coarse focusing of the specimen is obtained (a blur image is observed), rotate the fine adjustment knob (2) for fine detail focusing in a counter clockwise direction.

Working Distance (WD)
The WD refers to the distance between each objective and the specimen, when acute focus of the specimen is obtained.

Objective Magnification	4X	10X	40X	100X
WD (mm)	30.5	4.82	0.55	0.11

4. Adjusting the Interpupillary Distance (IPD)

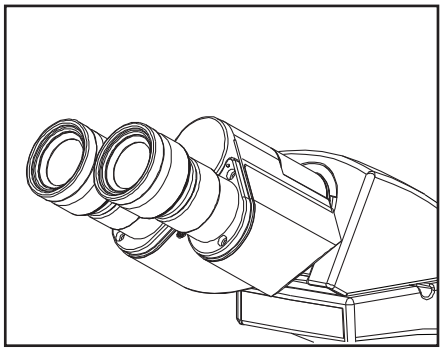

Fig 19

The inter-pupilary distance adjustment consists of moving the two eye pieces to align with both eyes pupils so that you can observe a single microscopic image through two eye pieces in stereo vision. This greatly helps to reduce fatigue and discomfort during observation.

While looking through the eyepieces, move both eyepieces laterally until the left and right fields of view coincide completely. The position of index dot (•) indicates the inter-pupilary distance value.

Note your interpupillary distance so that it can be quickly referred to in the future. This may need when multiple users work with the microscope.

5. Adjusting the Diopter

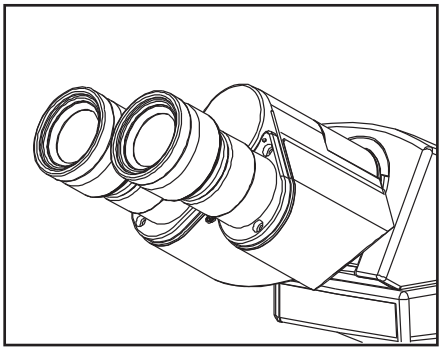

Fig 20

Procedure for adjusting the diopter:
1. Rotate the right eyepiece to match the markings of your IPD (if your IPD is 64, rotate the eyepiece to 0 mark).
2. While looking through the right eyepiece with your right eye, rotate the coarse and fine adjustment knobs to bring the specimen into focus.
3. While looking through the left eyepiece with your left eye, rotate only diopter adjustment ring on the eyepiece until specimen is at its best possible focus.

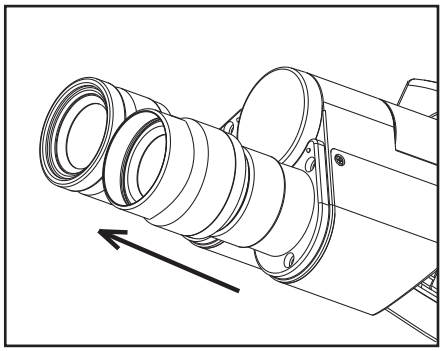

Fig 21

Using the Eye Gaurds

When Wearing Eye glasses: Use with the eyeguards in the normal, folded-down position. This will prevent the eyeglasses from being scratched.

When Not Wearing Eye glasses: Extend the folded eye guards outwards (direction of the arrow) to prevent ambient light from entering into your line of vision.

6. Centering the Condenser

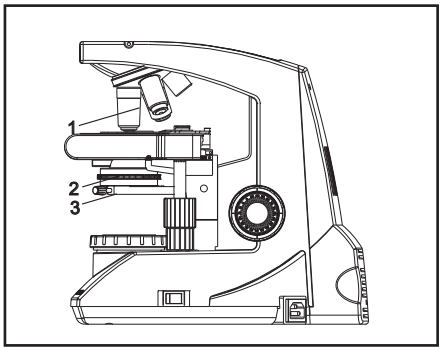

Fig 22

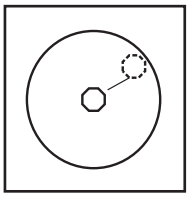

There is a possibility of having the condenser de-centered during shipping. It is mandatory to check the centering before observing the specimen as it is required to distribute even light to the specimen.

For models with Koehler illumination:

1. Bring the 10x objective(1) in the front position.
2. Move the condenser to the highest point.
3. Close the Koehler. (2) Focus the light spot as shown in the illustration below.
4. Use the centering screws (3) provided on left and right sides of the condenser bracket to bring the light spot to center of the view field.

7. Adjusting the Condenser Position and Aperture Iris Diaphragm

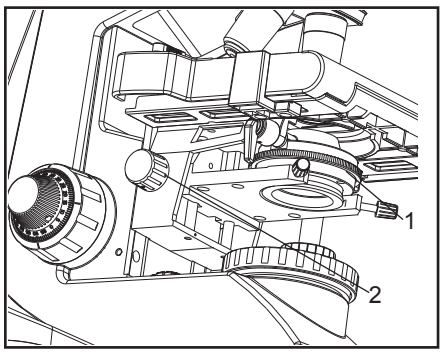

Fig 23

The condenser is most often used in the highest position. If the observed field of view is not bright enough, brightness may be improved by lowering the condenser slightly.

1. Rotate the condenser height adjustment knob (2) to move the condenser to the highest or desired position.
2. The aperture iris diaphragm ring (1) has an objective magnification scale (4X, 10X, 40X, 100X). Rotate the ring so that the magnification of the objective is clearly visible while using the microscope.

8. Switching the Objectives

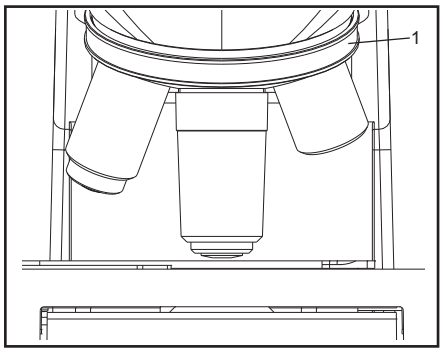

Fig 24

Rotate the revolving nosepiece (1) so that the objective to be used is in line above the specimen. Always use the ribbed grip (1) to rotate the objective nosepiece.

9. Using the 100X Immersion Objective

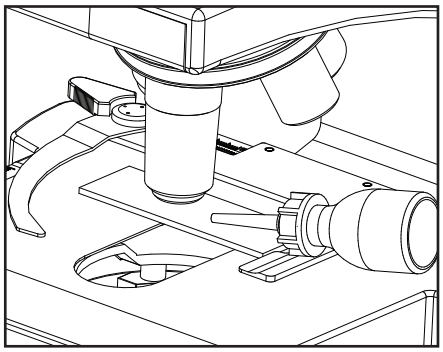

Fig 25

The designated immersion oil should be in contact with the cover lens of 100X immersion objective. If not, the specimen will apear distorted and dull. It is recommended that LABOMED immersion oil is always used.

Immersion Process:

1. Bring the specimen in focus using first the 10x, then 40x objective.

2. Disengage the 40x cycling towards 100x, and place a drop of immersion oil on the center point of the specimen.

3. Rotate the revolving nosepiece to engage the immersion objective and rotate the fine adjustment knob to bring the specimen into focus. (Since air bubbles in the oil will affect the image quality, make sure that the oil is free of bubbles. To remove bubbles, rotate the revolving nosepiece slightly to agitate the oil).

4. The condenser of this microscope manifests the full performance when at top position , oil is placed between the slide glass and the front lens of condenser. If oil is not placed there, the observed image may appear dark.

5. After use, remove oil from the objective front lens by wiping with lens tissue slightly moistened with an ether (70%) and alcohol (30%) mixture.

Caution:

If immersion oil makes contact with your eyes, rinse eyes out thoroughly with fresh water. If immersion oil makes contact with skin, wash affected areas with soap and water.

If prolonged discomfort is experienced, consult your physician immediately.

12 TROUBLESHOOTING GUIDE

Under certain conditions, performance of the unit may be adversely affected by factors other than defects. If problems occur, please review the following list and take corrective action as needed. If problem persists, please contact LABOMED or your local LABOMED dealer.

Observation	Cause	Remedy
1. Uneven brightness in observation field	The objective is not engaged in the light path	Engage the objective into position until the nose turret clicks
	The condenser is too low	Raise up to achieve more light (pg #18)
	The objective, eyepiece, condenser and/or window lens are dirty	Clean them thorougly as previously prescribed in “Optical cleaning” (pg#4)
2. Dust or stains are visible in observation field	The eyepiece, condenser, window lens and/or specimen glass is dirty	Clean glass parts thoroughly with lens tissue and cleaning solution prescribed in “ Optical cleaning” (pg#4)
3. Glare visible in field of view	The condenser is too low. The condenser iris diaphragm ring is closed	Raise condenser light. Adjust the aperture according to the objective magnification (pg#18)
4. Observation image is hazy or unclear	The objective is not engaged in the light path	Engage the objective into position until it clicks (pg#18)
	The objective, eyepiece, condenser and/or specimen glass is dirty	Clean glass parts thoroughly with lens tissue and cleaning cloth
	Immersion oil is not used with an immersion objective	Use immersion oil as suggested (pg#19)
	Bubbles are present in immersion oil	Remove the bubbles by agitation (pg#19)
	The specified immersion oil is not used	Use the immersion oil supplied by LABOMED
5. Part of the image is out of focus	The objective is not properly engaged in the light path	Engage the objective into position until the nose turret clicks
	The specimen is not set properly on the stage	Set the specimen correctly on the stage and secure using the specimen holder (Pg#15)
6. Coarse focus adjustment cannot lower the stage low enough	The condenser is too low	Raise the condenser

TROUBLESHOOTING GUIDE

Observation	Cause	Remedy
7. Fields of view through both eyepieces is inconsistent	The interpupillary distance is not adjusted properly	Adjust IPD to the appropriate setting (pg#17)
	Diopter compensation for the two eyes is not set	Adjust diopter settings (pg#17)
	The left and right eyepieces are of different magnification	Ensure that both eyepieces are of same magnification. LABOMED does not recommend using third party eyepieces in conjuction with LABOMED microscopes.
8. Objective hits the specimen when an objective is switched to a higher magnification objective	The specimen slide is upside down	Set the specimen correctly with the cover glass facing upwards
	The cover glass is too thick	Use a cover glass with thickness of 0.17 mm
	The stage is raised too high	Lower the stage
	The slide has slipped from the slide holder	Re-position the slide in the slide holder
	Slide is of excessive thickness	Use slides with thickness between 0.9 and 1.4 mm
9. Bulb does not turn ON (Ensure power cord is securely plugged)	Bulb is not mounted	Attach a bulb
	Bulb is blown	Replace the bulb
	The power cord is unplugged	Firmly secure into the box socket and wall outlet
	Fuse is blown	Check and replace with live fuse
	Battery is low	Charge battery
10. Bulb blows easily	The specified bulb is not used	Replace with the specified bulb

13 SPECIFICATIONS

1. Illumination	Built-in illumination system Halogen			
2. Focusing mechanism	Stage height adjustment mechanism Fine adjustment scale: 0.003µm per graduation Fine adjustment stroke: 0.3mm per turn Toal stroke: 12.7 mm Co-axial coarse and fine focusing on ball drive			
3. Revolving nosepiece	Quintuple position fixed (reverse angle)			
4. Observation tube		Binocular	Trinocular	Ergonomic
	Field number	22 (standard)	22 (standard)	22 (standard)
	Tube tilting angle	30˚	30˚	0˚-25˚
	Interpupillary distance adjustment range	48-75	48-75	48-75
5. Stage	Size	200 x 160mm (with mechanical stage)		
	Movement range	76 X 50mm		
	Specimen holder	Double specimen		
6. Condenser	Type	Fliptop Abbe condenser (daylight filter detachable)		
	N.A.	1.25		
	Aperture iris diaphragm	Built-in		
7. Dimensions & Weight	301.0mm (L) x 227.0 mm (W) x 420.0mm (H); 9 kg net			
8. Electrical	Halogen/LED	6V-30W/1 Watt		
	Bulb life	Upto 500 hours/ LED 50,000 hours		
9. Operating Environment	Indoor use Altitude: Max. 2000 meters Ambient temperature: 5˚ to 40˚ C (41˚ to 104˚ F) Maximum ralative humidity: 80% for temperature up to 31˚ C (88˚ F), decreasing linearly through 70% at 34˚C (93˚ F), to 50% relative humidity at 40˚ C (104˚ F) Supply voltage fluctuations: Not to exceed ± 10% of normal voltage. Polution degree: 2 (in accordance with IEC60664) Installation/Overvoltage category: II (in accordance with IEC60664)			

www.laboamerica.com

Our policy is one of continuous development. Labo America, Inc., reserves the right to change design and specifications without prior notice.

Labo America Inc.
920 Auburn Court
Fremont, CA 94538
USA

Tel: +1 510 445 1257
sales@laboamerica.com

A28240 ISO 9001

LABOMED

LABOMED and Lx500 are registered trademarks of Labo America, Inc.

With a policy of continuous development, Labo America, Inc. reserves the right to change design and specifications without prior notice.

© 2016 Labo America, Inc. | 9144000-795 08-2018

Printed in the USA