LABOMED®
ideas for vision

PRIMA lite | DENTAL MICROSCOPE

YOUR VISION, OUR INNOVATION, BETTER DENTISTRY

Welcome to the pinnacle of dental precision with the LABOMED PRIMA lite dental microscope. Explore a world of options delivering optical finesse and mechanical excellence with Labomed dental solutions. With exceptional optical resolution and clarity, cool and true-to-daylight illumination, and fluid mechanics, the **PRIMA lite** is a confluence of performance harmony.

View dental anatomy in the highest fidelity and truest form thanks to LABOMED MaxLite optical technology. An optical pod with a built-in LED illumination source ensures a compact and streamlined design. **PRIMA lite** maneuvers with ease in even the most space-strapped clinical environments, occupying one of the smallest and lightest footprints in the industry across various mounting formats.

BRIGHTER, CLEANER, SMARTER: YOUR DENTAL MICROSCOPE

Experience optical superiority and mechanical versatility with the LABOMED **PRIMA lite** dental microscope. This compact yet feature-rich system boasts exceptional performance thanks to an Apochromatic optical design and LABOMED MaxLite optical coatings that come together to deliver unparalleled image clarity and field homogeneity in dental procedures.

An automatic balancing arm ensures exacting standards of stability when mounting cameras and accessories for seamless photo documentation and operation free of drift and vibration. And with a modern and streamlined industrial design, **PRIMA lite** will add a pleasing accent to any practice.

Superb Optics

Enjoy exceptional visual clarity and eye relief with the LABOMED **PRIMA lite** dental microscope. Apochromatic optical design comes together with superior coatings to deliver high anti-glare, scratch resistant optics that will stand the test of time. A fluidly adjustable magnification changer will deliver a range of magnification settings that can be adjusted with the help of readily available optical accessories. Plus, with the best glass in the world, **PRIMA lite** delivers more light to where it counts most – your eyes.

Ergonomics

Dentists expect supreme ergonomic benefit from a microscope - the **PRIMA lite** answers this mandate. Starting with a fluid arm system that is designed with tension controls tailored to user preference and houses a suspension arm that adjusts vertically without drift. A microscope carrier arm has advanced counterbalancing technologies that allow the microscope to articulate smoothly however the system is accessorized.

ERGONOMY

Brilliant Illumination

Bright and homogenous illumination is delivered thanks to an integrated 27W LED illumination system. Meticulous attention was paid to the optical coupling design to minimize light-loss internally. High caliber glass inputs, together with an exacting design standard allow the **PRIMA lite** to deliver supreme efficiency - 100,000 lux with very low power consumption with a 50,000 hour diode life expectancy.

The LABOMED **PRIMA lite** boasts a modern design that is ideal for those users who need a microscope versatile enough to adapt to office constraints as well as future build-outs. Modular in mounting and arm accessories, the **PRIMA lite** will accent nearly any environment with grace. Systems can also migrate from one mount to another with the use of adapter kits.

A host of video accessories can be added to your microscope in order to enhance optical capabilities, either through higher magnification eyepieces or variable working distance objectives. Adding on a virtually any DSLR or C-mount camera is simple and convenient thanks to a highly ergonomic rear-facing beam splitter, among other adapters from our ProLine. Or opt to add-on your favorite smart phone for the most intuitive and wireless still-capture and video recording platform available.

SPECIFICATIONS

Observation Tubes	0-210° inclinable binocular tube
IPD	49-78mm
Eyepieces	Standard: WF 10x/18mm with lockable eyeguards
	Optional: WF 12.5x/18mm with lockable eyeguards
Magnichanger	Apochromatic 5 step: 0.4x, 0.6x, 1.0x, 1.6x and 2.5x MaxLite coated
Objective	Standard: f250mm focussable
	NuVar 7: f290-360mm WD : 200-270mm
FOV	10.6-66mm
Fine focus	Manual, through objective adjustment knob
Light source	27W LED, 100-240V
LUX	100k
Maximum Wattage	60w
Built-in Filters	Green and Yellow
Microscope carriers	120° carrier
Optional accessories	Double beam splitter inclined, Rotoplate, Extender, Double iris, Proline range of camera adapters & smart phone adapters

FLOOR MOUNT

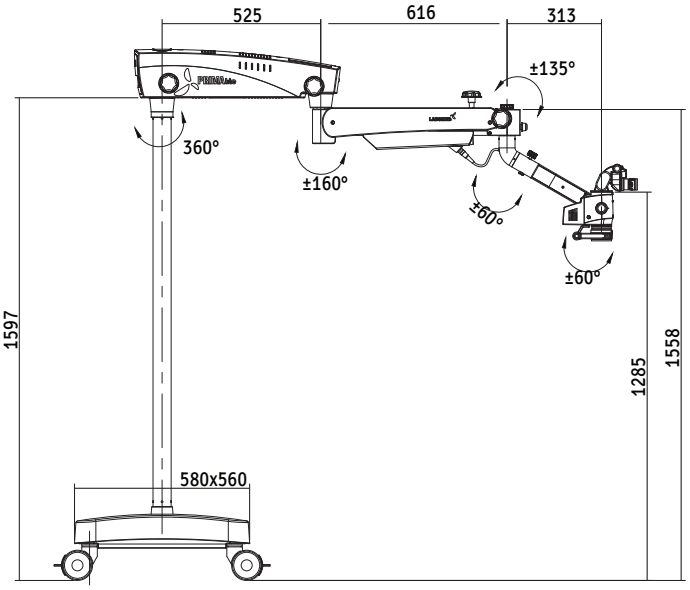

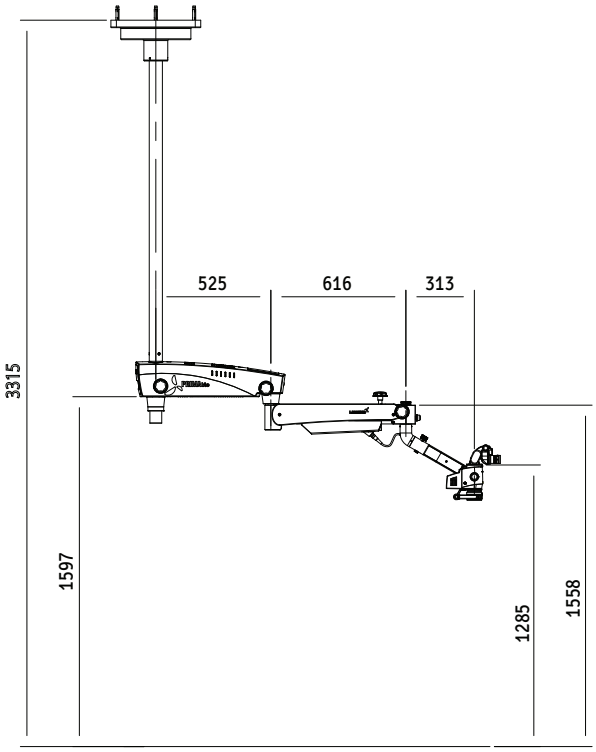

CEILING MOUNT

WALL MOUNT

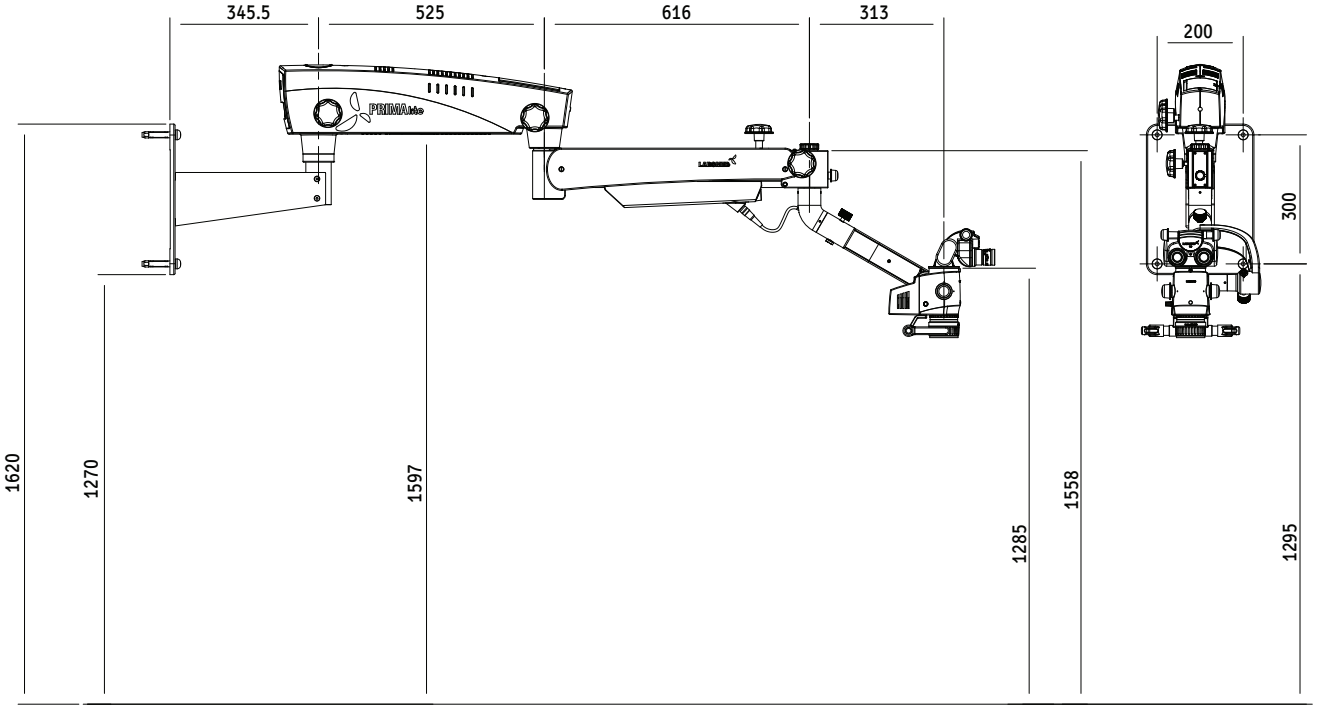

DESCRIPTION	CONFIGURATION	CATALOG NO
PRIMA lite	Floor Mount	6181501
PRIMA lite	Wall Mount	6181502
PRIMA lite	Ceiling Mount	6181503

Labotech Microscopes India Pvt Ltd
#19 HSIDC Industrial Estate
Ambala Cantt
Haryana, Pincode: 133006
INDIA

A16372 ISO 13485 : 2016
LABOTECH MICROSCOPES INDIA Pvt Ltd
6181000-796 1.0 010224