LABOMED®
ideas for vision

PRIMA OPH

User Manual

Operating Surgical Microscopy

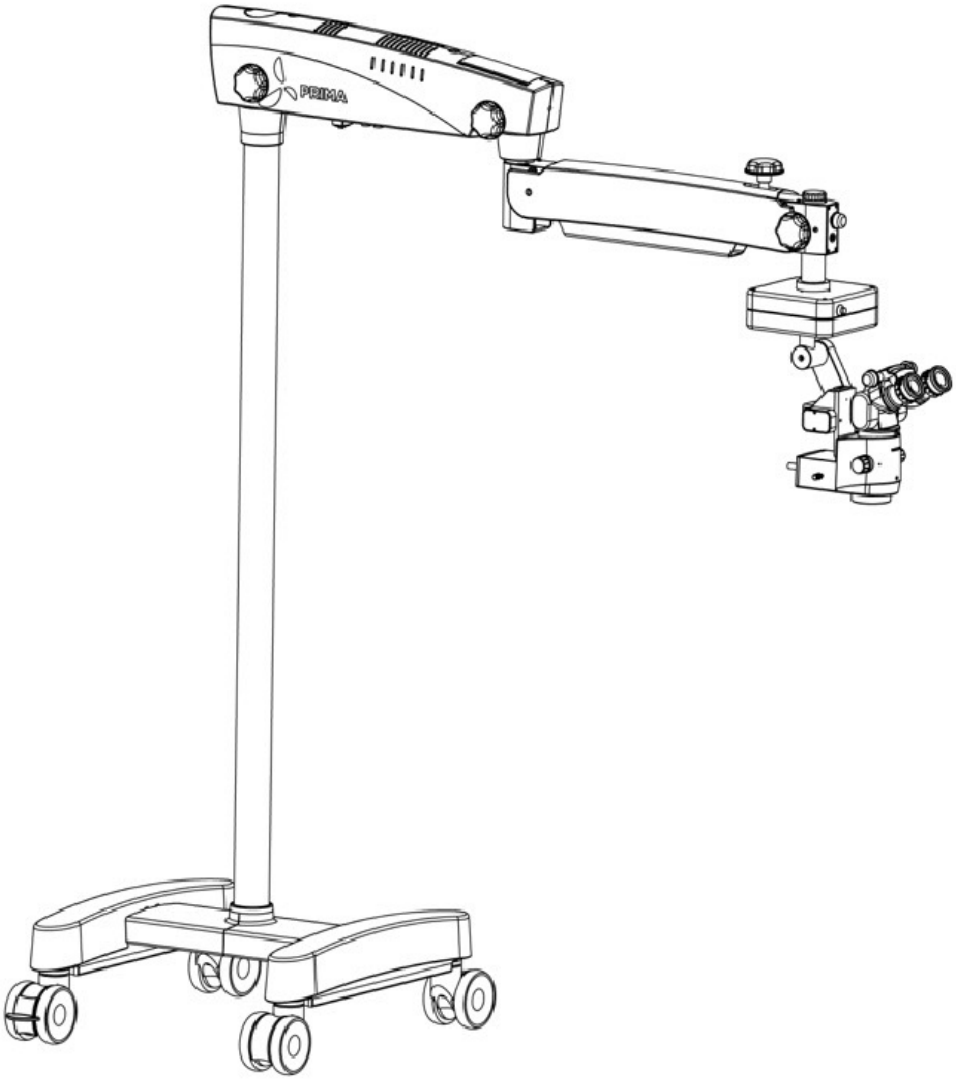

To ensure proper use of this instrument as well as to avoid injury while operating instrument,
Understanding this manual completely before use is highly recommended.

Part No: 6135000-795
Issue 2.5
Printed on Feb, 2026

TABLE OF CONTENTS

INTRODUCTION	1
SAFETY INSTRUCTIONS	2
WARNINGS AND CAUTIONS	3-4
SPECIAL INSTRUCTION FOR INSTALLATION & USE	5-6
WARNING LABELS AND NOTES	7-9
DESCRIPTION OF PARTS	10
SYSTEM DIAGRAM	11-12
UNPACKING	13
DIMENSIONS OF CASTOR MOUNTED	14
DIMENSIONS OF FLOOR MOUNTED	15
DIMENSIONS OF WALL MOUNT ASSEMBLY	16-21
INSTALLATION REFERENCES (WALL MOUNT)	22-28
WALL MOUNT INSTALLATION PREPARATION	29
WALL MOUNT INSTALLATION PROCEDURE	30-36
INSTALLATION & INSTRUCTION	37-38
INSTALLATION	39-40
ELECTRIC CONNECTION	41
CONTROLS	41
PRIMA WIRING CODING DIAGRAM	42
INSTRUCTION FOR USING THE MICROSCOPE	43-45
CHANGING THE OBJECTIVE & EYEPIECES	46
REPLACING THE ILLUMINATION SOURCE	46
FUSE REPLACEMENT	46
THERMAL CUT OFF	47
TENSION ADJUSTMENT	47
MOVING POSITION	48
CLEANING & SERVICING	49-50
CLEANING AND DISINFECTION	51
AMBIENT REQUIREMENT	51
TROUBLESHOOTING TABLE	52-53
DISPOSALS	53
SPECIFICATION	54
GUIDANCE TABLES	55-58
DIMENSIONS	59
GLOSSARY	60
WARRANTY	61-62

INTRODUCTION

The LABOMED Prima OPH is a surgical and diagnostic microscope, which is adaptable for different Surgical needs for consistent visualization during all intra operative phases of ophthalmic surgery by providing a magnified view of the surgical field without compromise to performance.

The microscope provides extremely high optical image quality, good depth of focus and wide field of view for precise surgery. Illumination control, inbuilt tilt, adjustment of the observation head help to reduce the surgeon's work fatigue and allow comfortable use over long period.

Salient features of this Microscope are:

1. The observation head can easily be positioned with the help of suspension arm.

2. An advanced 5-step magnification changer allows an optical magnification for a particular surgery from five different magnification.

3. Cold light illumination with a high intensity 50W LED lamp is provided using a fiber optic guide for proper illumination. The illumination is further adjustable up to its most suitable brightness using intensity control knob suitably located at the suspension arm, and is easily approachable to the surgeon.

4. When the microscope is not in use, the suspension arm can be folded over the main body to store it compactly.

5. Rigid H-form base with castor wheels provides greater stability as well as mobility to the instrument.

6. Dual Iris Diaphragm allows greater depth of field particularly valuable for photography.

☞ Any serious incident associated with this device should be reported to Labo America, Inc. USA and to your national health agency.

SAFETY INSTRUCTIONS

SAFETY

The instrument described in this manual has been developed and tested in accordance with LABOMED safety standards and with national and international regulations. A high degree on Instrument safety is thus ensured.

Additional safety notes are also contained in other parts of this user's manual; they are marked with a warning triangle containing an exclamation mark as shown here. Please pay special attention to these safety notes.

Safety is only ensures when this instrument is operated properly. Please read this manual carefully before turning the instrument on. Also read through the user's manuals on the other equipment used with this instrument. You may obtain further information from our service Organization or authorization representative.

DIRECTIVES AND STANDARDS

The instrument in this manual has been designed in the compliance with the following standards
- EN
- IEC
- UL
- CSA

DIRECTIVE / REGULATIONS:

. Regulations (EU) 2017/745
. IEC 60601-1-3rd edition (2005)
. IEC 60601-1-2
. EN 55011:2007

CLASSIFICATIONS

. For Europe, per MDR 2017/745, the unit is a Class I instrument, per rule 13, Annex VIII
. For the United States, the FDA classification is Class I.
. Please observe all applicable accident prevention regulations.
. I**P Code - IP 20 (Foot Switch - IP 24)**

WARNINGS AND CAUTIONS

LABOMED is not responsible for the safety and reliability of this instrument when:
- Assembly, disassembly, repair, or modification is made by unauthorized dealers or persons.
- The instrument is not used in accordance with this user manual.

A WARNING is an instruction that draws attention to the risk of injury or death.

WARNING: THIS INSTRUMENT SHOULD BE USED IN STRICT ACCORDANCE WITH THE INSTRUCTIONS OUTLINES IN THIS USER'S GUIDE. THE SAFETY OF THE OPERATOR AND THE PERFORMANCE OF THE INSTRUMENT CANNOT BE GUARANTEED IF USED IN A MANNER NOT SPECIFIED BY LABOMED.

WARNING: DO NOT REPAIR OR SERVICE THIS INSTRUMENT WITHOUT AUTHORIZATION FROM THE MANUFACTURER. ANY REPAIR OR SERVICE TO THIS INSTRUMENT MUST BE PERFORMED BY EXPERIENCED PERSONAL OR DEALERS WHO ARE TRAINED BY LABOMED OTHERWISE SERIOUS INJURY TO THE OPERATOR OR PATIENT MAY OCCUR.

WARNING: MODIFICATIONS TO THIS INSTRUMENT ARE NOT ALLOWED. ANY MODIFICATION TO THIS UNIT BE AUTHORIZED BY LABOMED OTHERWISE SERIOUS INJURY TO THE OPERATOR OR PATIENT MAY OCCUR.

WARNING: IF THIS INSTRUMENT IS MODIFIED, APPROPRIATE INSPECTION AND TESTING MUST BE CONDUCTED TO ENSURE CONTINUED SAFE USE OF THIS INSTRUMENT.

WARNING: ENSURE THAT THE VOLTAGE APPLIED TO THE UNIT IS THE SAME AS THE VOLTAGE THAT IS INDICATED ON THE DATA PLATE OTTHERWISE DAMAGE TO THE UNIT MAY OCCUR.

WARNING:TO USE IN FLUCTUATION VOLTAGE ENVIRONMENT CONSTANT VOLTAGE STABILIZER OR UPS IS RECOMMENDED FOR SAFE & EFFICIENT USE OF DEVICE.

WARNING: TO AVOID RISK OF ELECTRIC SHOCK AND FOR SAFETY OF THE INSTRUMENT, THIS UNIT MUST BE PLUGGED INTO AN OUTLET WITH AN EARTH GROUND. DO NOT REMOVE OR DEFEAT THE EARTH GROUND CONNECTION ON POWER INPUT CONNECTOR OF THE UNIT'S POWER CORD.

WARNING: THE EQUIPMENT OR SYSTEM SHOULD NOT BE USED ADJACENT TO OR STACKED WITH OTHER EQUIPMENT AND THAT IF ADJACENT OR STACKED USE IS NECESSARY, THE EQUIPMENT OR SYSTEM SHOULD BE OBSERVED TO VERIFY NORMAL OPERATION IN THE CONFIGURATION IN WHICH IT WILL BE USED.

WARNING: THIS INSTRUMENT IS NOT SUITABLE FOR USE IN THE PRESENCE OF FLAMMABLE ANESTHETIC MIXTURES, SUCH AS OXYGEN OR NITROUS OXIDE.

WARNING: BECAUSE PROLONGED INTENSE LIGHT EXPOSURE CAN DAMAGE THE RETINA, THE USE OF THIS DEVICE FOR OCULAR EXAMINATION SHOULD NOT BE UNNECESSARILY PROLONGED, AND THE BRIGHTNESS SETTING SHOULD NOT EXCEED WHAT IS NEEDED TO PROVIDE CLEAR VISUALIZATION OF THE TARGET STRUCTURES.

WARNING: DURING THE TRANSPORTATION, THE EQUIPMENT SHOULD BE IN FOLDING POSITION AS SHOWN IN SECTION "MOVING POSITION OF THE SYSTEM".

WARNINGS AND CAUTIONS (continued)

A CAUTION is an instruction that draws attention to the risk of damage to the product.

CAUTION: THE INTERNAL CIRCUITRY OF THE INSTRUMENT CONTAIN ELECTROSTATIC SENSITIVE DEVICES (ESD) THAT MAY BE SENSITIVE TO STATIC CHARGES PRODUCED BY THE HUMAN BODY. DO NOT REMOVE THE COVERS WITHOUT TAKING PROPER ESD PRECAUTIONS.

CAUTION: DO NOT USE SOLVENTS OR STRONG CLEANING SOLUTIONS ON ANY PART OF THIS INSTRUMENT TO AVOID DAMAGE TO THE UNIT MAY OCCUR SEE THE CARE AND MAINTENANCE SECTION FOR DETAILED CLEANING INSTRUCTIONS.

CAUTION: MEDICAL ELECTRICAL EQUIPMENT NEEDS SPECIAL PRECAUTIONS WITH RESPECT TO ELECTROMAGNETIC CHARGE (EMC) AND NEEDS TO BE INSTALLED AND SERVICED ACCORDING TO THE EMC INFORMATION PROVIDED IN THE ACCOMPANYING DOCUMENTS.

CAUTION: PORTABLE AND MOBILE RF COMMUNICATIONS EQUIPMENT CAN AFFECT MEDICAL ELECTRICAL EQUIPMENT.

CAUTION: THIS INSTRUMENT IS NOT TO BE USED NEAR HIGH-FREQUENCY EMITTING SURGICAL EQUIPMENT.

CAUTION: THIS INSTRUMENT IS NOT INTENDED TO BE CONNECTED TO EQUIPMENT OUTSIDE THE CONTROL OF LABOMED OR MUST BE TESTED TO AN APPLICABLE IEC OR ISO STANDARDS.

CAUTION: DEVICE SHOULD NOT BE OPERATED WITHOUT SILICONE COVERS FOR HANDLES AND ALL KNOBS.

SPECIAL INSTRUCTIONS FOR INSTALLATION & USE

SAFE WORKING ORDER

- Do not operate the equipment contained in the delivery package in
- Areas having explosion or inflammability, risk the presence of inflammable anesthetics or Volatile solvents such as alcohol, benzene or similar chemicals.
- Do not install, store or use the instrument in damp rooms, It is important and cautionary To protect the instrument from being exposed to humidity, wet conditions, water splashes or water sprays.
- Do not use the instrument if you notice any electrical arcing, sparks, abnormal noises, smokes or fumes. Unplug it immediately and contact authorized LABOMED service Representative.

Ensure that the power point is properly grounded

If Voltage Fluctuation are more than 10% of rated voltage. Always ensure to use a Constant Voltage stabilizer with this Instrument.

- Do not force cable connections. If the male and female parts do not readily connect. make sure that they are appropriate for one another. If any of the connectors are damaged, have our service representative to repair them.
- Anything concerning repairs, customization and up-gradation this instruction must be carried out by LABOMED authorized representative failing which, LABOMED product warranty will not be applicable.
- The instrument must be operated by a trained Person for its intended use only and after duly understanding the operation instructions .
- Only use the instrument with the accessories supplied. Should you wish to use other accessories with this equipment, make sure that LABOMED has certified its use for safety of the instrument.
- It is recommended that the user's manual be kept accessible always.
- Do not pull at the light source cable, at the power cord or at other cable connections.

It is recommended to get the instrument checked once every 12 months to ensure its Optimum performance.

SPECIAL INSTRUCTIONS FOR INSTALLATION & USE

REQUIREMENT FOR OPERATION

Installation of the instrument must only be carried out by an authorized LABOMED agent or Representative. Please make sure that the following requirements for operation remain fulfilled in the future:

- All mechanical connections (details in the user's manual) which are relevant to safety and properly connected and screw connections tightened.
- All cables and plugs are in good working condition.
- The voltage setting on the instruments conforms to the rated voltage of the line Supply on site.
- The power cord being used is the one designed for use with this instrument.

BEFORE EVERY USE AFTER RE-EQUIPPING THE INSTRUMENT

- Make sure that all "Requirement for operation" are fulfilled.
- Go through the checklist.
- Re-attach or close any covers, panels or caps which have been removed or opened.
- Pay special attention to warning symbols on the instrument (triangular warning signs with exclamation marks), labels.

FOR EVERY USE OF THE INSTRUMENT

- Avoid looking directly into the light source, e.g. into the microscope objective lens or a light guide.
- All light radiation have an effect in skin and biological tissues. For your own protection advised to keep the light level to the absolute minimum required for your procedure.

WARNING!

Only the right configuration of LABOMED Prima surgical microscope must be used for Related procedure.

WARNING LABELS AND NOTES

Caution

Observe all warnings labels and notes!
If any label is missing on your instrument or has become illegible, please contact us or one of our authorized representatives.
We will supply the missing labels.

Instrument label plate

The instrument label plate indicates the following:

- Name of the unit
- Cat. No.
- Rated voltage and current consumption
- Rated frequency range
- Serial number
- Safety compliance
- Brand name

Brightness Control

After the illumination has been switched on, you can continuously adjust the brightness of the fiber illumination by turning the appropriate knob.

Red & Green LED

LED light shown here at front of swivel arm, always glow “GREEN” during working position of the instrument. This LED will glow “RED” when suspension arm is parked at uppermost position, i.e. instrument is not in working position. This is an indication to the user that he has to bring the arm down to use it again to LED became green again. Please note that at parking position, illumination LED will be off to save LED life but at the same time fans will be in operating condition to keep the unit cool & safe.

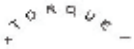

Balance setting

Turn the screw to adjust the balance setting of the suspension arm.

Ceiling and wall mount

Don’t use the mount to support yourself

Maximum load

When the surgical microscope are mounted on the suspension systems the overall weight of the microscope including accessories and coupling must not exceed a maximum value of 7.5kg. Please consult the user manual for the suspension system about the admissible maximum load.

Accompanying Documents must be consulted

REF **Catalog Number**

CE **Compliance to Medical Device Regulation (EU) 2017/745**

Protective Earth

WARNING LABELS AND NOTES (continued)

This Way Up-Indicates correct upright position of the transport package.

Keep Dry- Transport package shall be kept away from rain.

The CE mark (an acronym for the French "Conformity Europeenne") Certifies that a product has met European Union Health, safety and Environment requirements which ensure consumer safety

Manufacturer

Fragile- Content of the transport package are fragile and therefore shall be handled with care

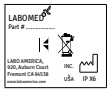

IPX label for foot control switch

MD **Medical Device**

EC REP **Authorized European Representative**

SN **Serial No (YY-Year, MM-Month, XXXX-Serial No)**

REF **Model No**

Max. Safe Load 9 Kg

IP 20 **Ingress Safety Protection**

WARNING LABELS AND NOTES (continued)

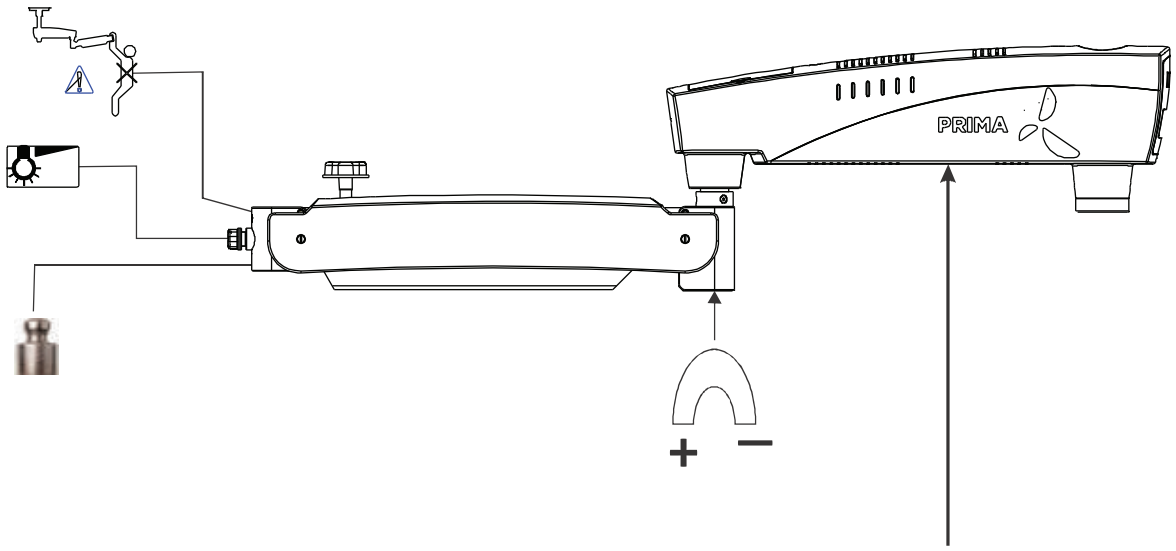

PRIMA OPH (SURGICAL MICROSCOPE)

LABOMED

REF .....
SN YY MM XXXXX
VOLTS:100-240~
HERTZ 50/60
POWER MAX 60 W

GTIN BAR CODE

"LABO AMERICA, INC.
920 Auburn Court
Fremont, CA 94538.
UNITED STATES OF AMERICA
+15104451257
SALES@LABOAMERICA.COM
WWW.laboamerica.com

Replace Fuse : F 2.5 A L 250 V
6211000-451 Label Revision: G

MD

TOTAL MASS -

MADE IN INDIA

DESCRIPTION OF PARTS

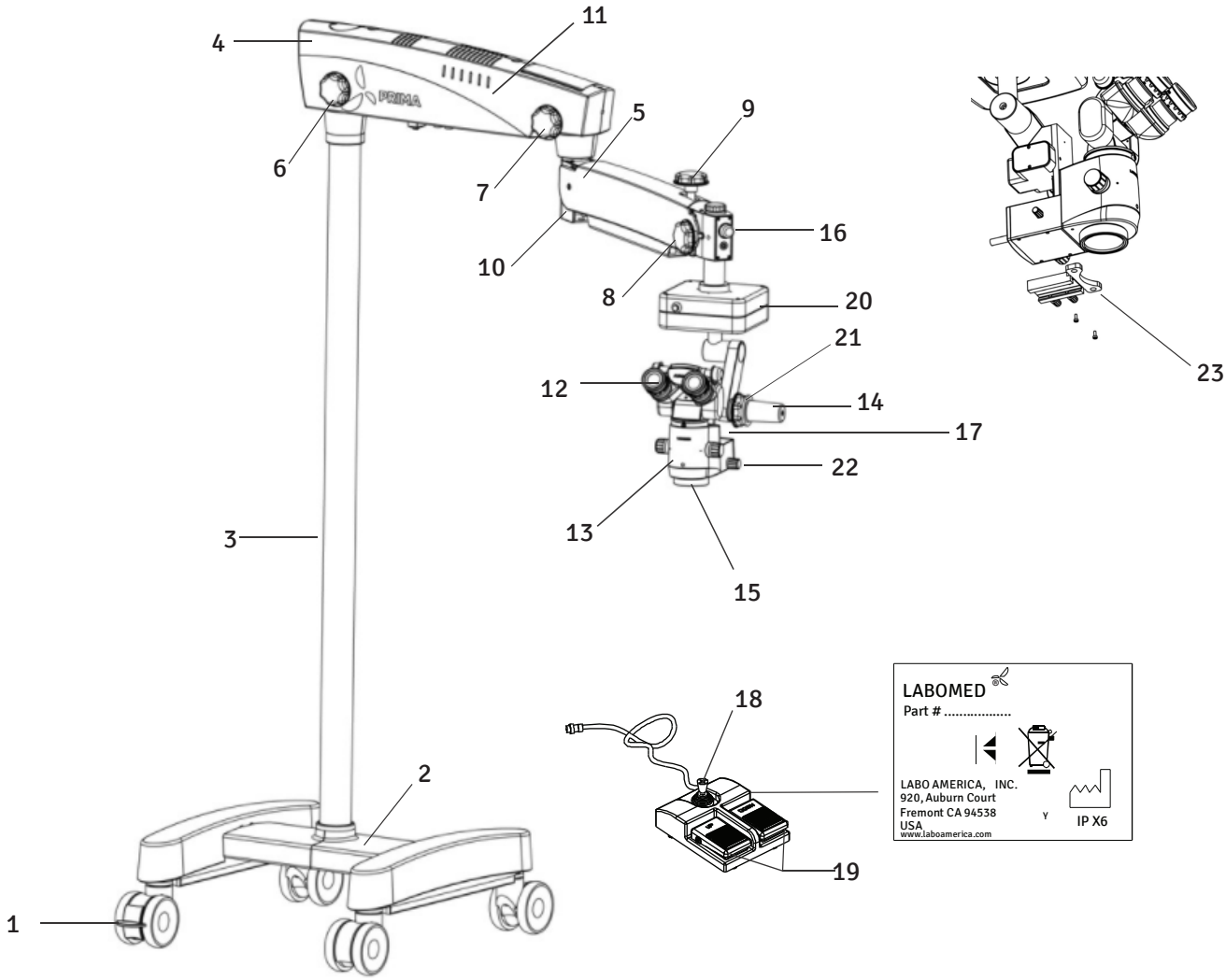

Fig. 1 1.

1. Wheel with brake
2. Metal base
3. Column
4. Swivel Arm
5. Suspension Arm
6. Swivel arm locking knob
7. Suspension arm movement locking knob
8. Coupling movement locking knob
9. Suspension arm hydraulic movement lock
10. Suspension arm spring tension adjustment
11. Swivel arm cover
12. Binocular head with eyepieces
13. Magnichanger
14. Handle
15. Common Main Objective
16. Illumination Control Knob
17. Z- axis
18. Joystick for XY Movement
19. Foot paddles for Z-axis
20. XY Coupling
21. Tilt Control & Lock Knob
22. Filter Knob
23. Fundus Viewing Attachment adapter (Volk - Merlin)

SYSTEM DIAGRAM

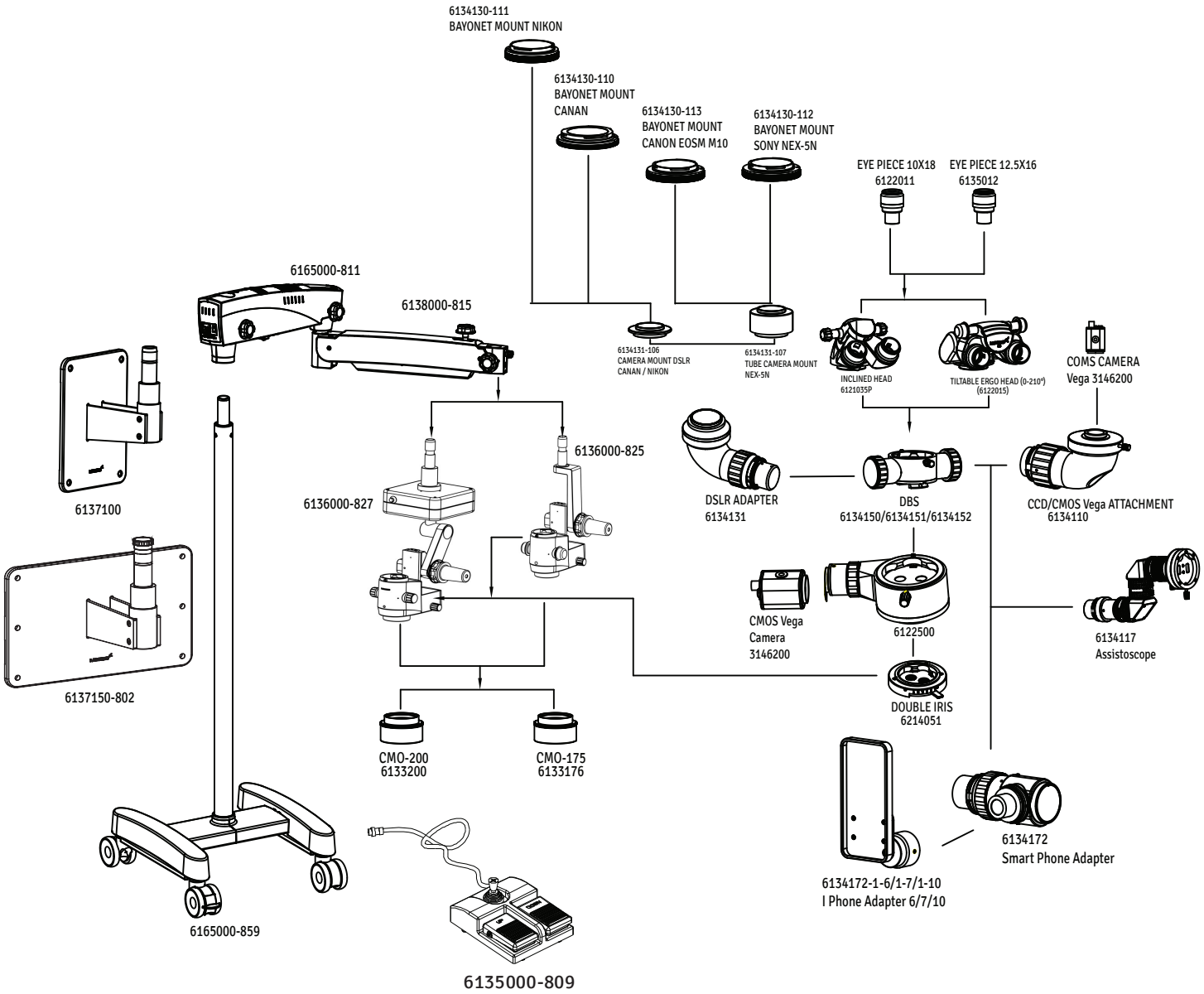

SYSTEM DIAGRAM (continued)

DESCRIPTION OF PART NO.

PART NO.	DESCRIPTION
1. 6165000-811	Swivel arm assembly
2. 6138000-815	Suspension arm assembly
3. 6136000-827	XY Coupling
4. 6136000-825	Z Axis Coupling
5. 6135012	12.5x Eyepiece
6. 6120010	10x Eyepiece
7. 6121035P	45°inclined Binocular Head
8. 6122015	210° tiltable binocular tube
9. 6133200	200mm Objective
10. 6133176	175mm Objective
11. 6135000-809	Foot Control for XY control
12. 6137100	Vertical Wall Mount
13. 6137150-802	Horizontal Wall Mount
14. 6165000-859	Floor Mount
15. 6134150	Double Beam Splitter 50-50
16. 6134151	Double Beam Splitter 70-30
17. 6134152	Double Beam Splitter 80-20
18. 6122500	Single beam splitter
19. 6134131	DSLR Adaptor
20. 6134131-106	Camera Mount DSLR Canon/Nikon
21. 6134131-107	Tube Mount DSLR Sony
22. 6134130-111	Bayonet Mount Nikon
23. 6134130-110	Bayonet Mount Canon
24. 6134130-113	Bayonet Mount Canon EOSM M10
25. 6134130-112	Bayonet Mount Sony NEX
26. 6134110	CCD/CMOS Attachment
27. 6214051	Double Iris Diaphragm
28. 6134117	Assistoscope
29. 6134712	Smart Phone Adapter Tube
30. 6134172-1-6	Iphone Adapter i6
31. 6134172-1-7	Iphone Adapter i7/i8
32. 6134172-1-10	Iphone Adapter i10
33. 6165000-979	Indian Power Cord
34. 6165000-974	Schuko Power Cord
35. 6165000-973	USA POWER Cord
36. 612086-972	Australian Power Cord

UNPACKING

The appliance is delivered in sub-assembled groups along with one set of Installation Kit and one instruction / service manual.

Please check following at the time of unpacking:

1. Mobile supporting base with brakes on castor wheels, or the type of mounting system.

2. Column (Floor or Ceiling or Wall Mount) as ordered.

3. Swivel arm and suspension arm assembly with fibre optic cable.

4. XYZ Assembly or Z- Axis Assembly with Magnichanger and Objective as ordered.

5. Observation Head, (inclined or ergo) as ordered.

6. Paired Eye Pieces, as ordered.

7. Power Cord.

8. Set of sterilizable caps.

9. Installation Kit
   a) Allen Wrench 5.00mm.
   b) Allen Wrench 8.00mm.

10. Instruction cum Operating Manual .

DIMENSIONS OF CASTOR MOUNTED

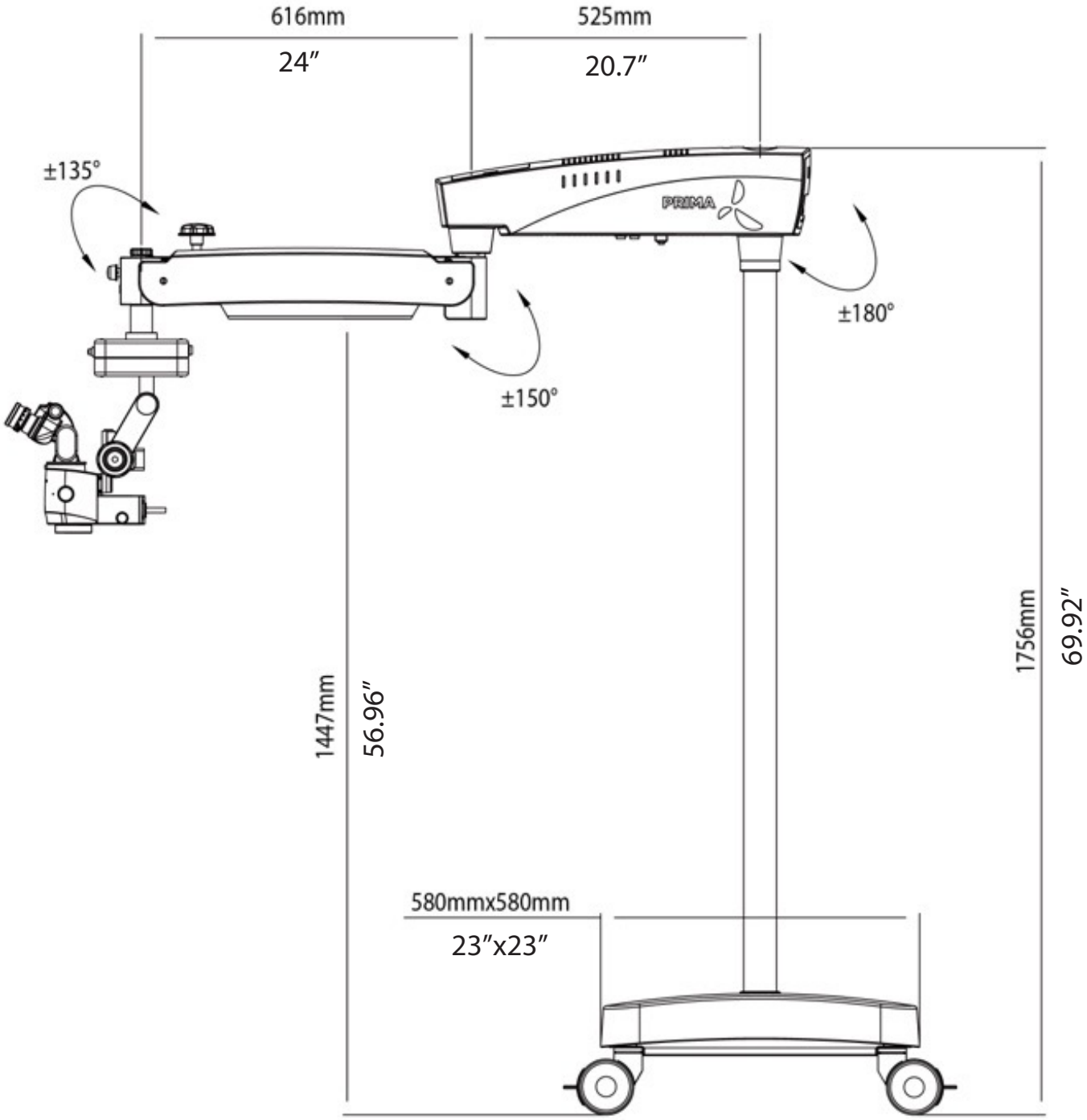

Fig. 1

DIMENSIONS OF FLOOR MOUNTED

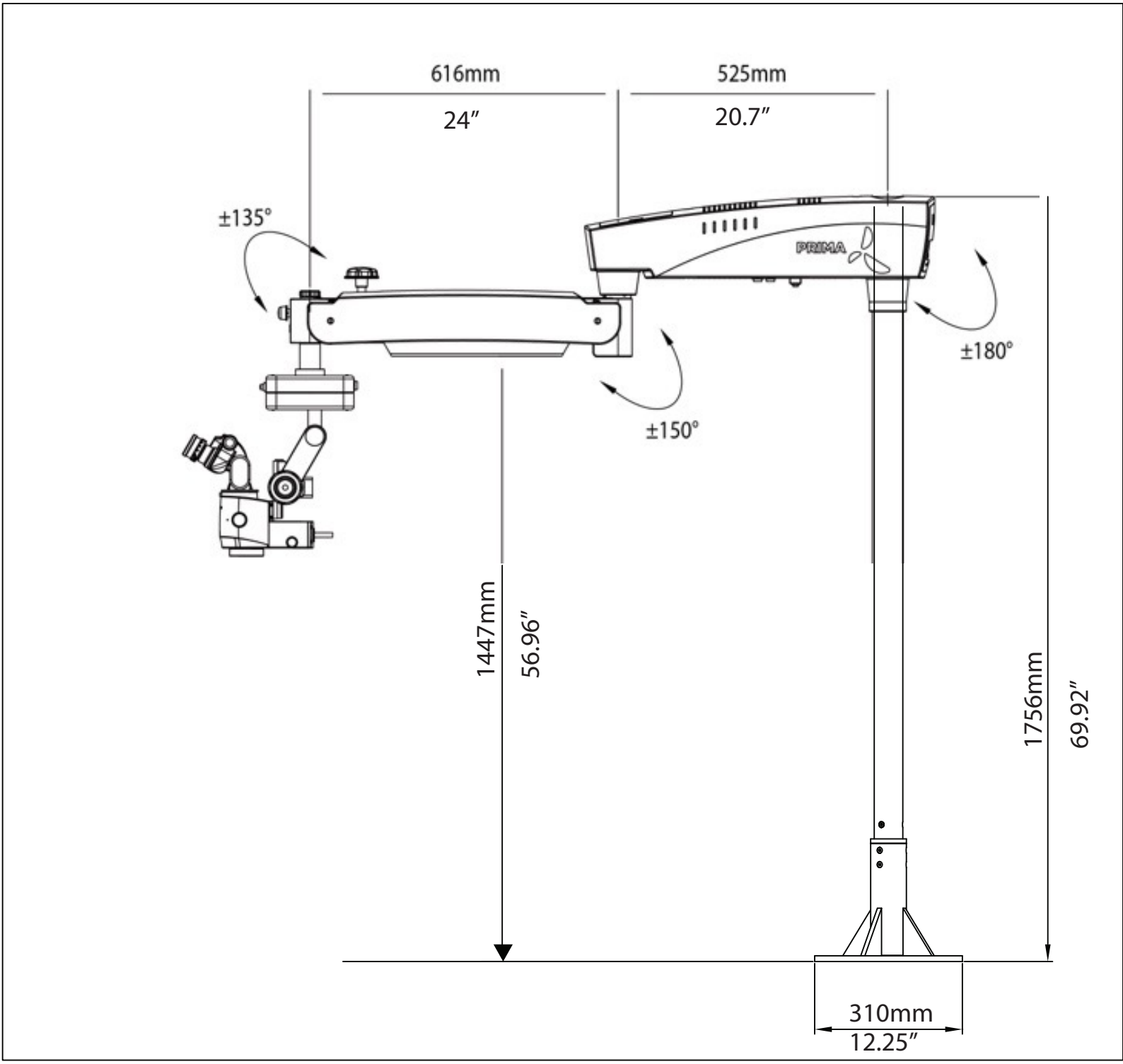

Fig. 2

310mm

WALL MOUNT ASSEMBLY(DIMENSIONS)

HORIZONTAL WALL MOUNT WITH STANDARD SUSPENSION ARM

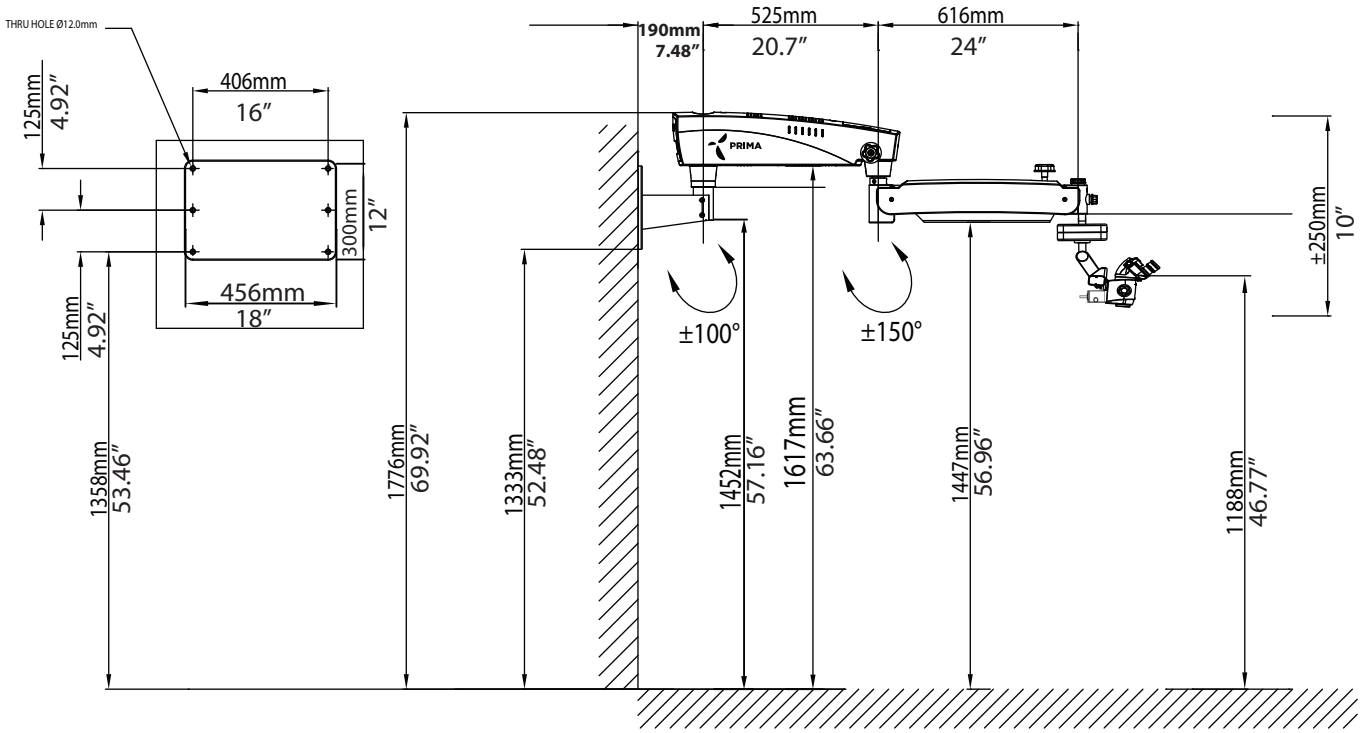

Fig . 3

WALL MOUNT ASSEMBLY(continued)

VERTICAL WALL MOUNT WITH STANDARD SUSPENSION ARM

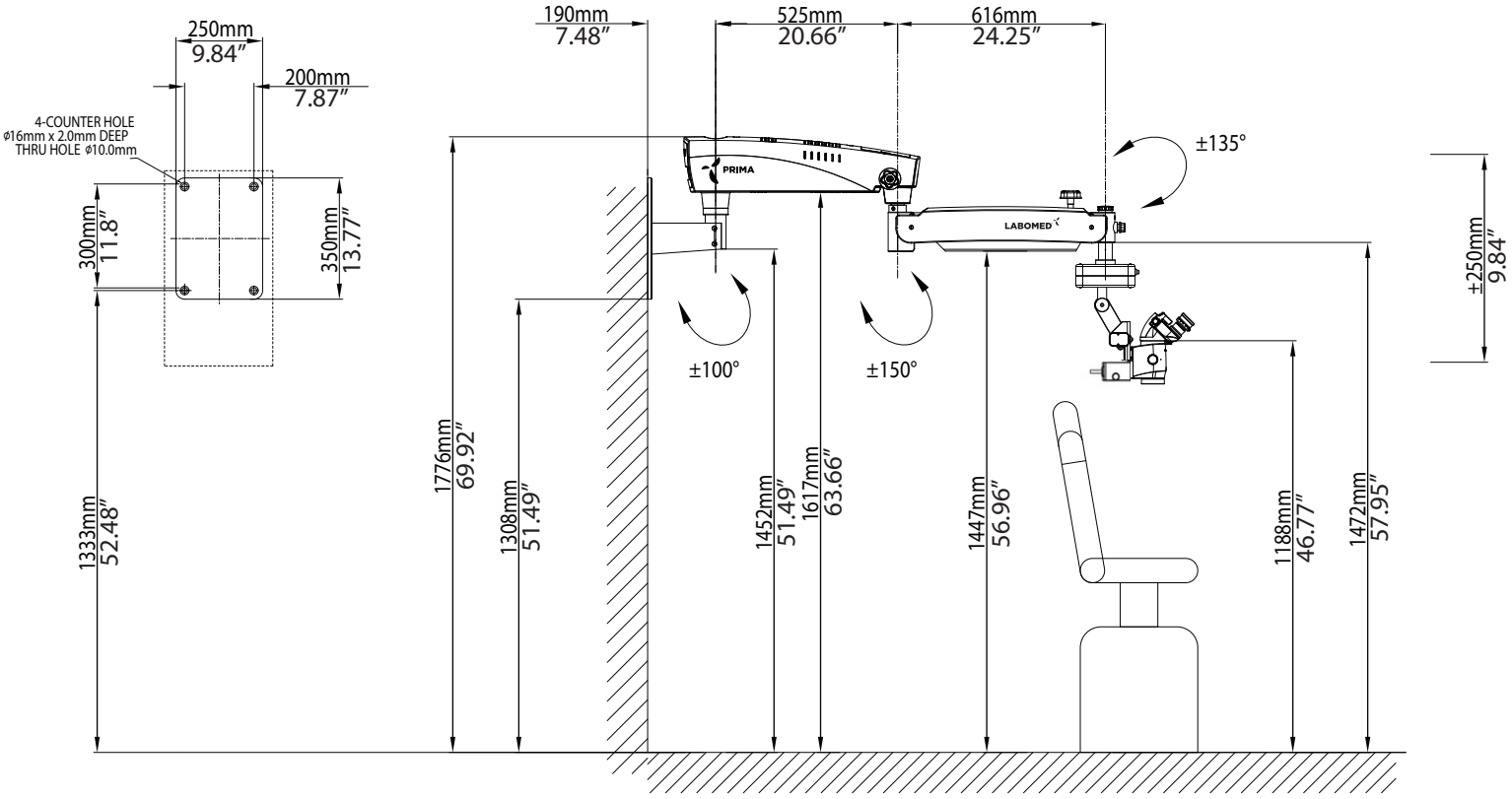

Fig . 3A

WALL MOUNT ASSEMBLY(continued)

VERTICAL WALL MOUNT (LONG BRACKET) WITH STANDARD SUSPENSION ARM

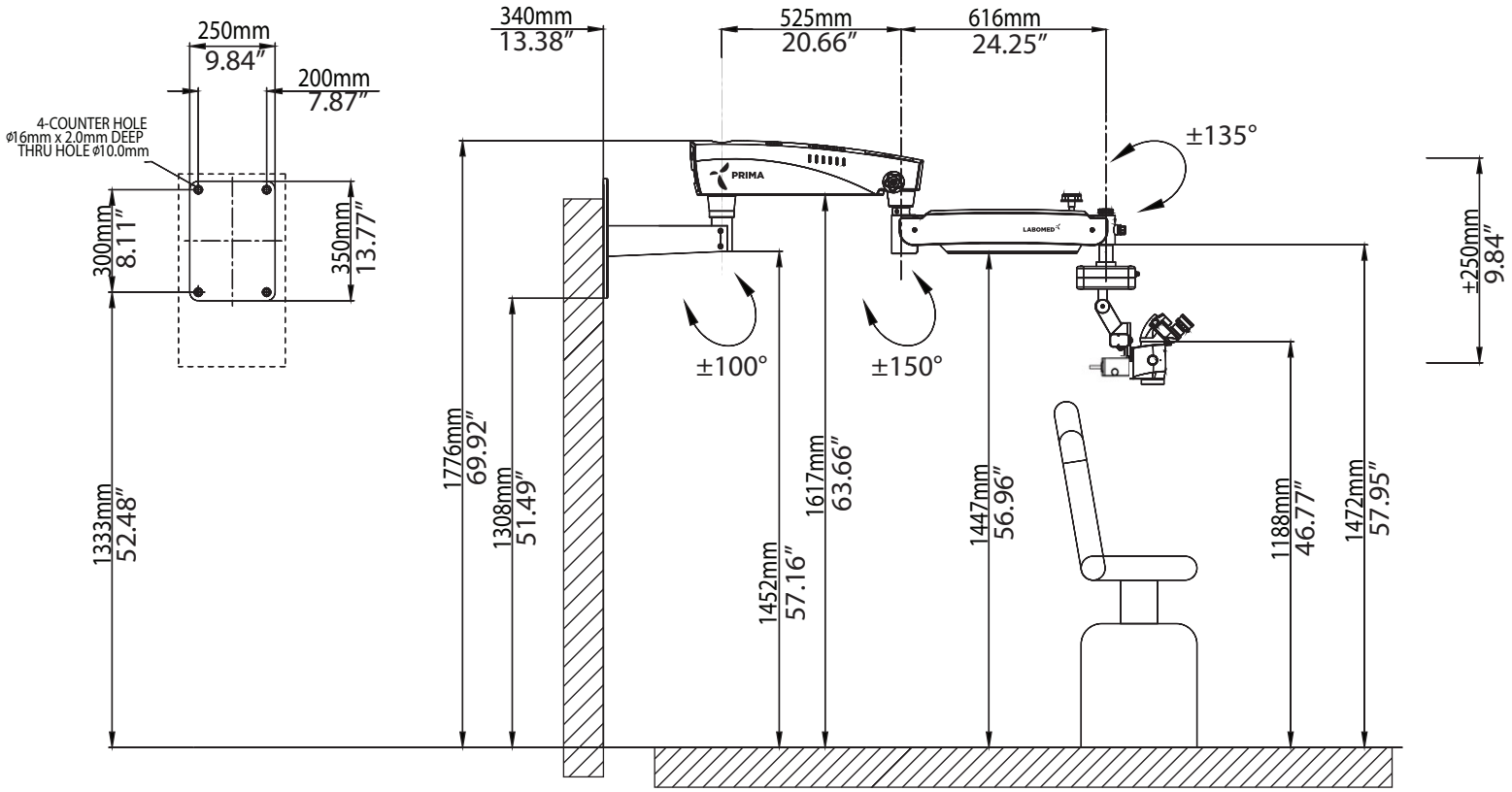

Fig . 3B

WALL MOUNT ASSEMBLY(continued)

HORIZONTAL WALL MOUNT WITH LONG SUSPENSION ARM

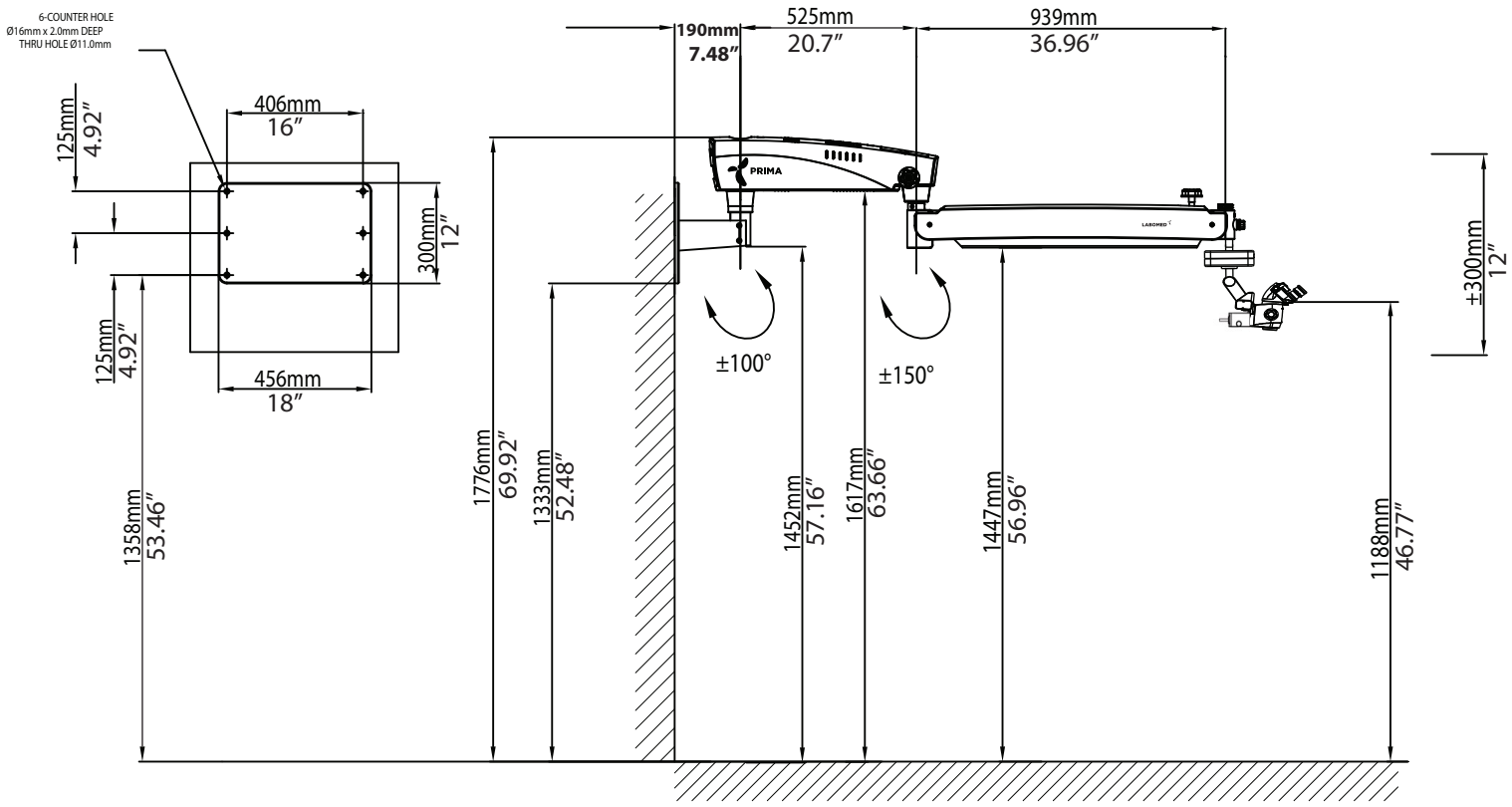

Fig. 4

WALL MOUNT ASSEMBLY(continued)

VERTICAL WALL MOUNT WITH LONG SUSPENSION ARM

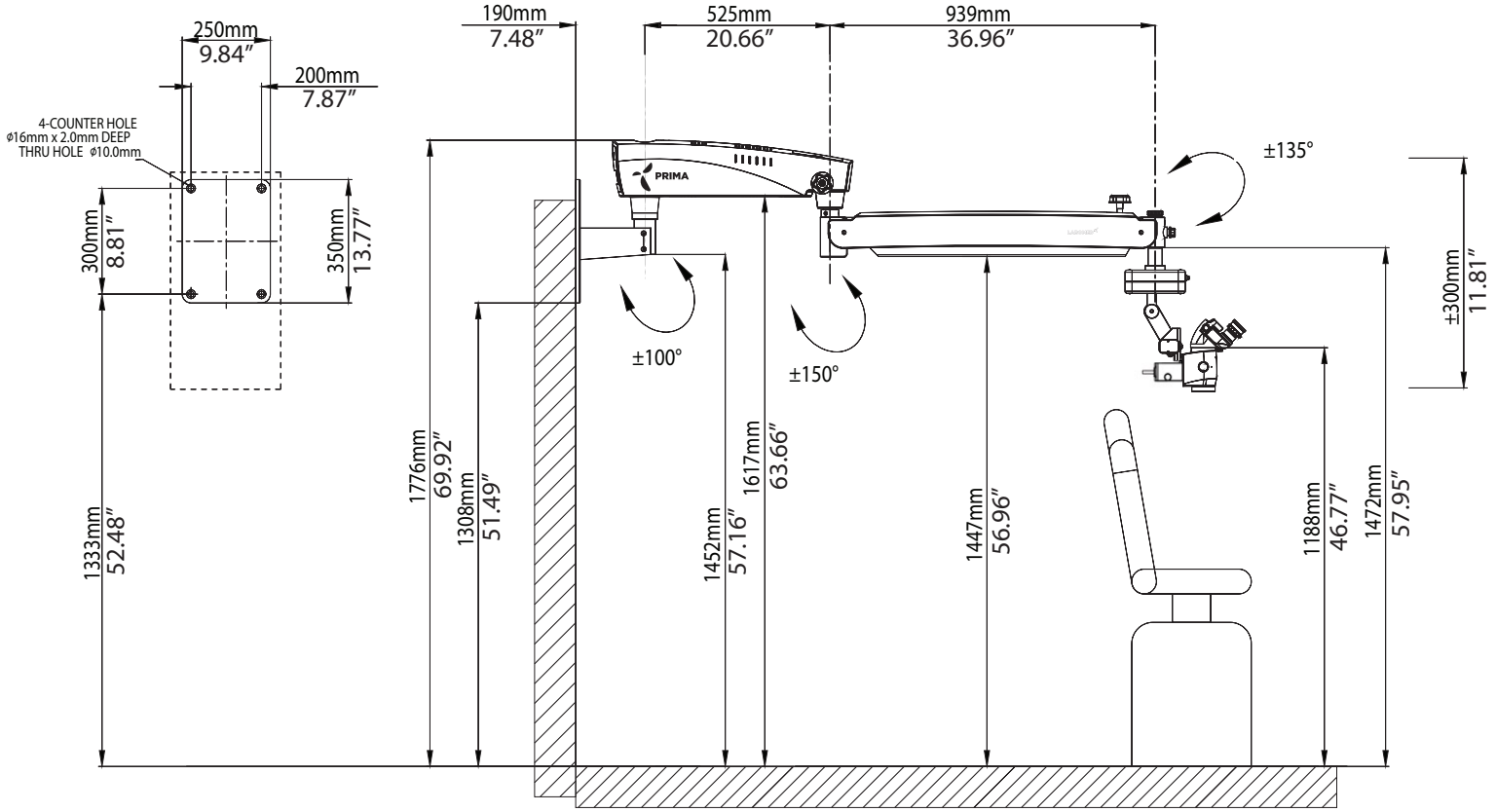

Fig. 4A

WALL MOUNT ASSEMBLY(continued)

VERTICAL WALL MOUNT (LONG BRACKET) WITH LONG SUSPENSION ARM

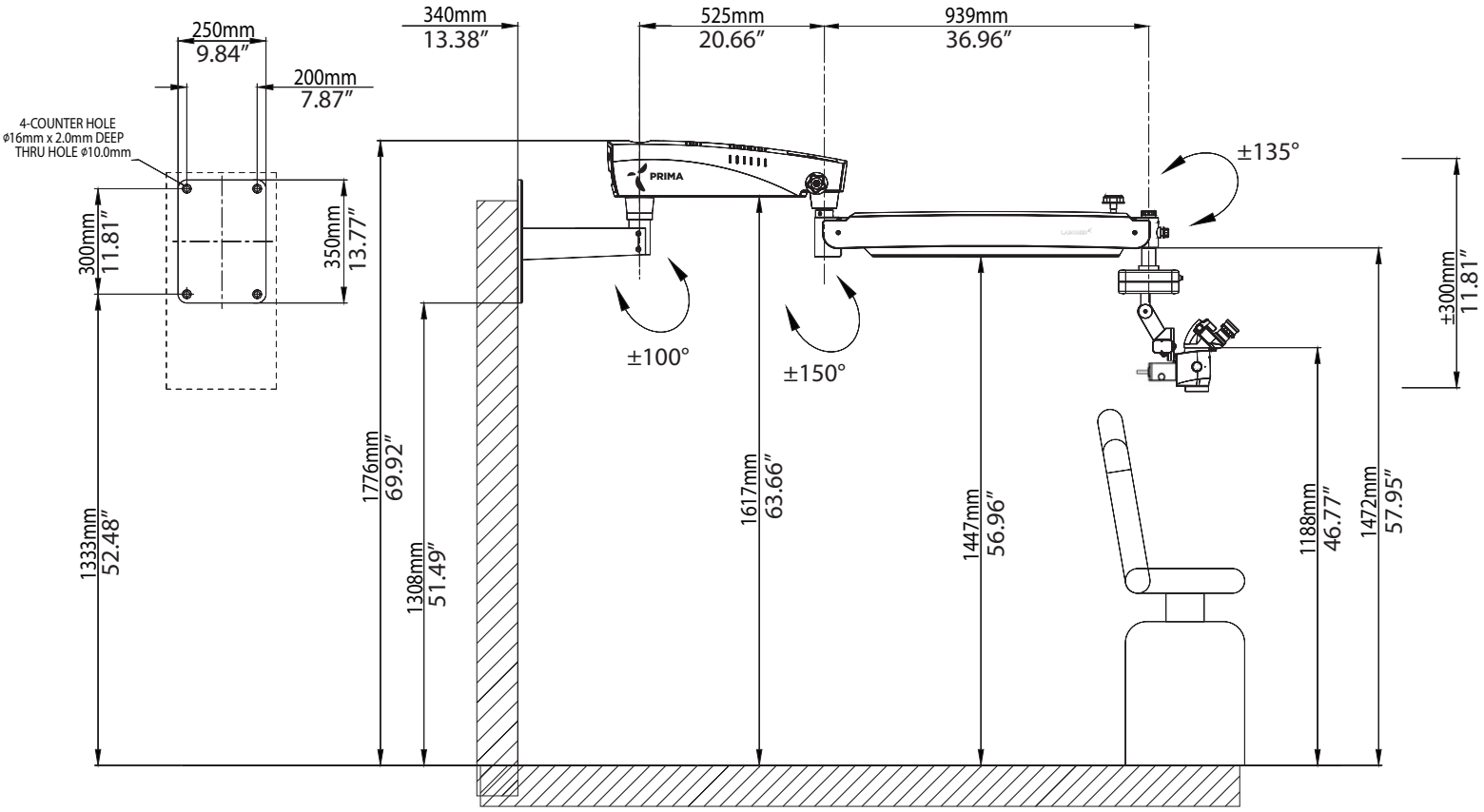

Fig. 4B

INSTALLATION REFERENCES (WALL MOUNT HORIZONTAL)

Wall mount: MARKING REFERENCE

Anchoring the Wall mount

Reference
A Paper Template for marking
B Wall Mount Assembly
C Distance from Floor- Refer suitable height as per ordered configuration from figure- 3 , 4 .

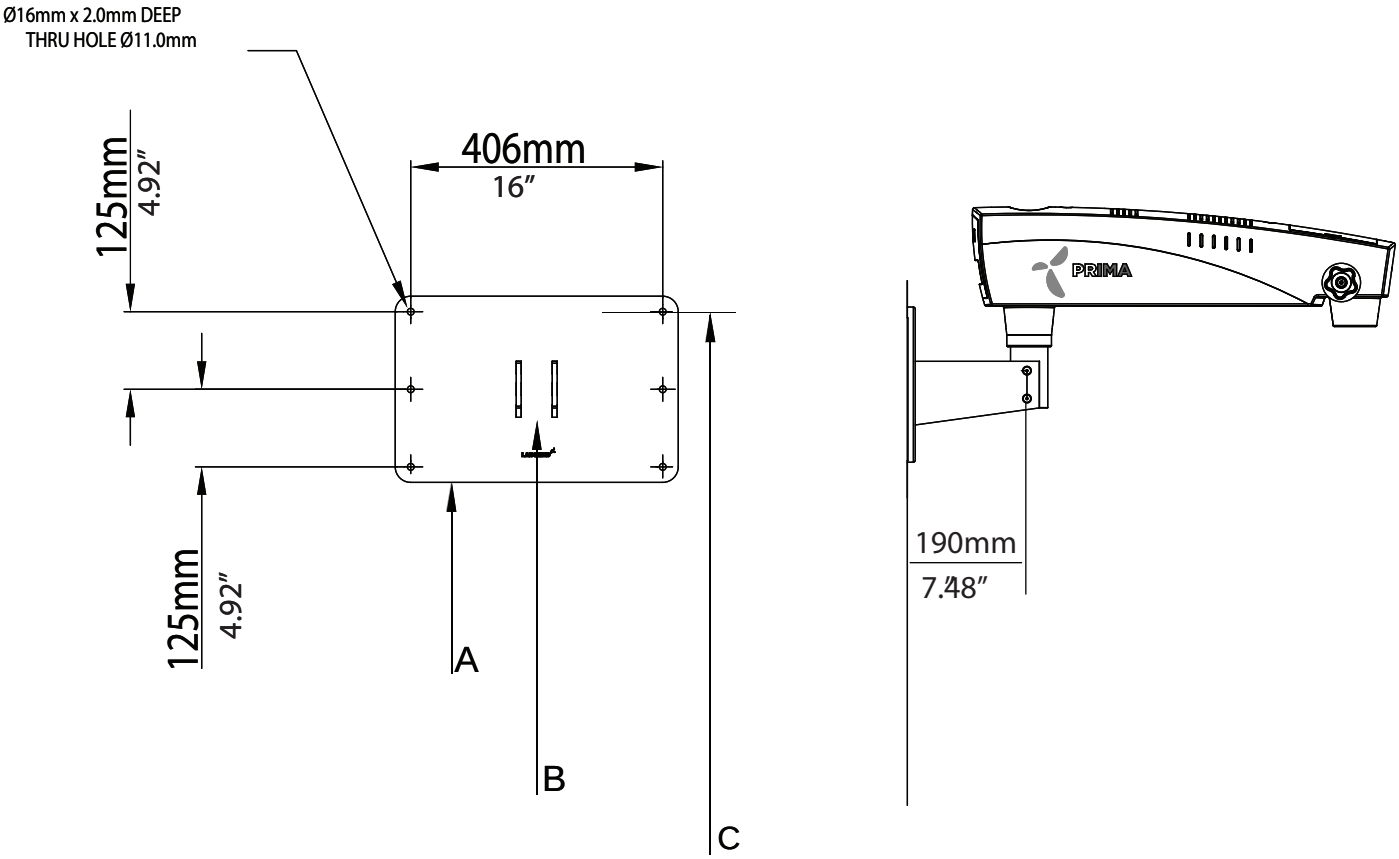

Fig .5

INSTALLATION REFERENCES (WALL MOUNT VERTICAL)

Wall mount: MARKING REFERENCE

Anchoring the Wall mount

Reference
A Paper Template for marking
B Wall Mount Assembly
C Distance from Floor- Refer suitable height as per ordered configuration from figure- 3 , 4 .

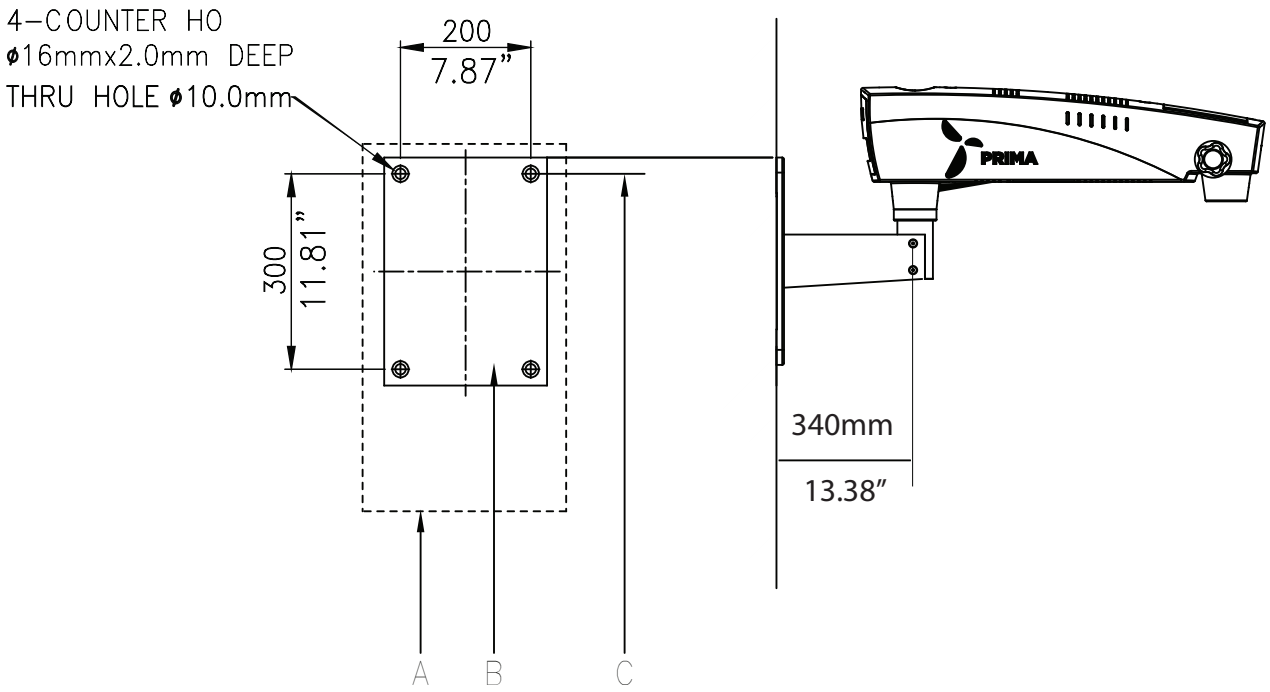

Fig .5A

INSTALLATION REFERENCES (WALL MOUNT)

Wall mount: Alternative installation to the patient's side
(With standard suspension arm)

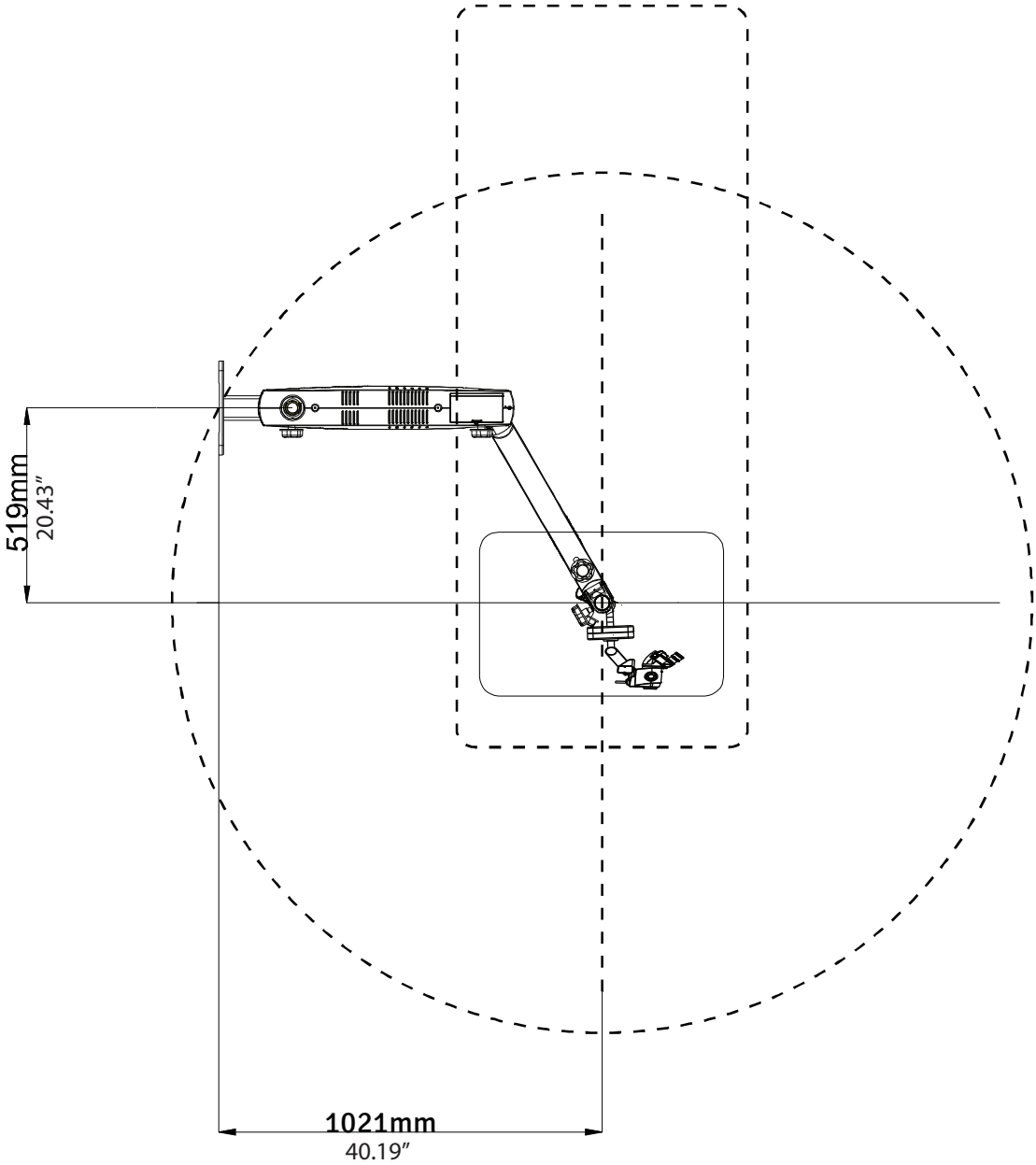

Fig. 6

INSTALLATION REFERENCES (WALL MOUNT(continued)

Wall mount: Alternative installation to the patient's side
(with long suspension arm)

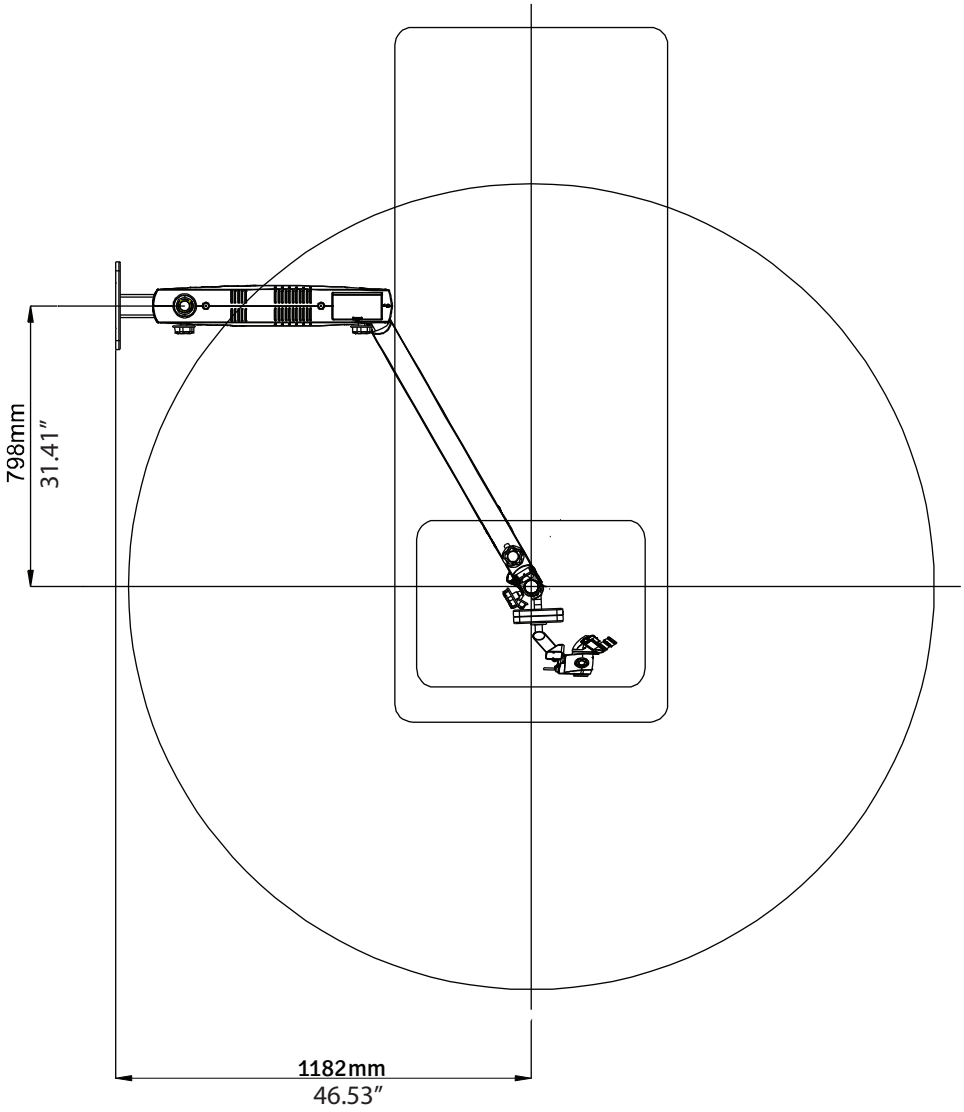

Fig . 7

WALL MOUNT INSTALLATION REFERENCES (WOODEN WALL)

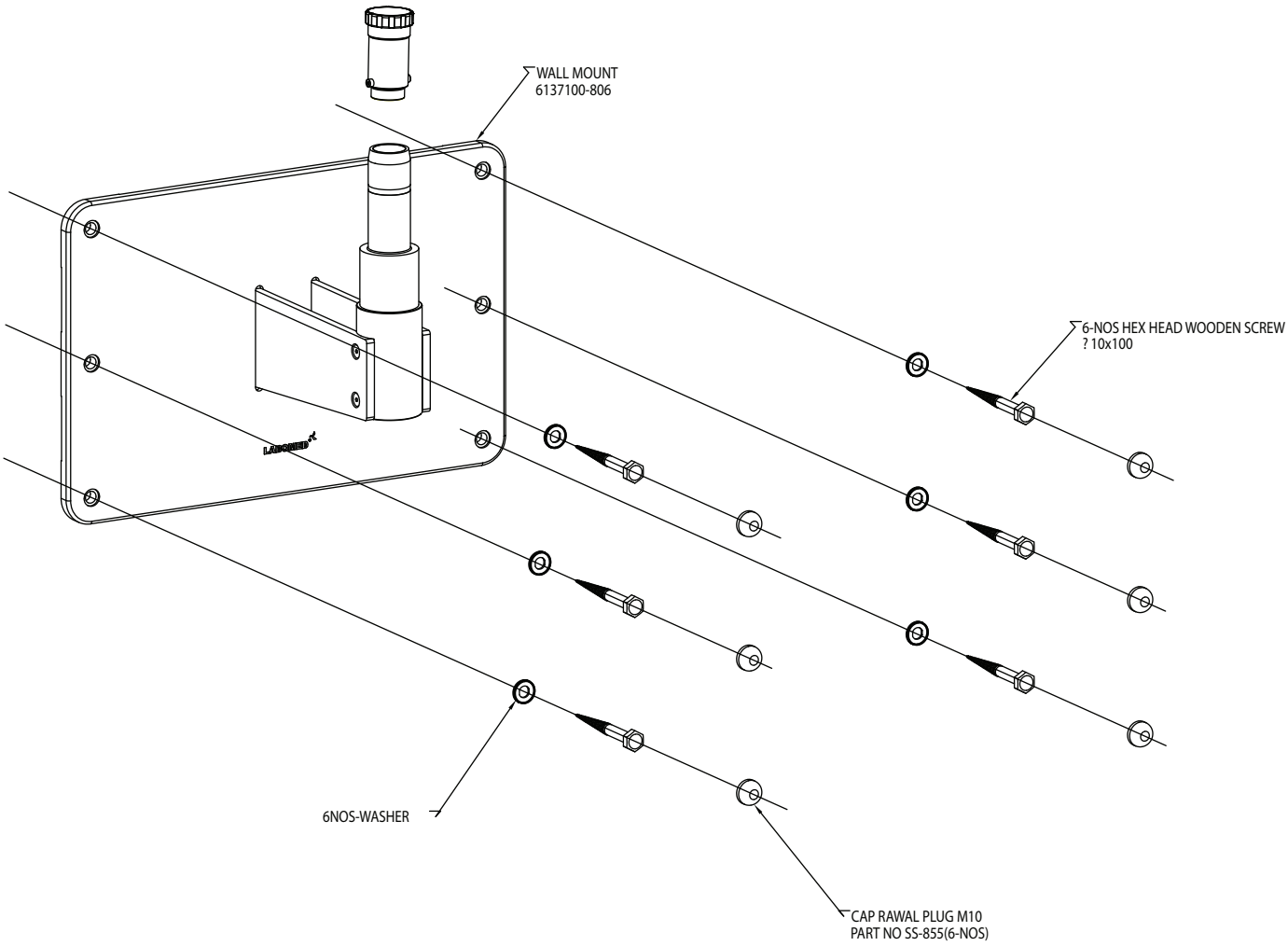

Fig . 8

HORIZONTAL WALL MOUNT INSTALLATION REFERENCES(SOLID BRICK WALL)

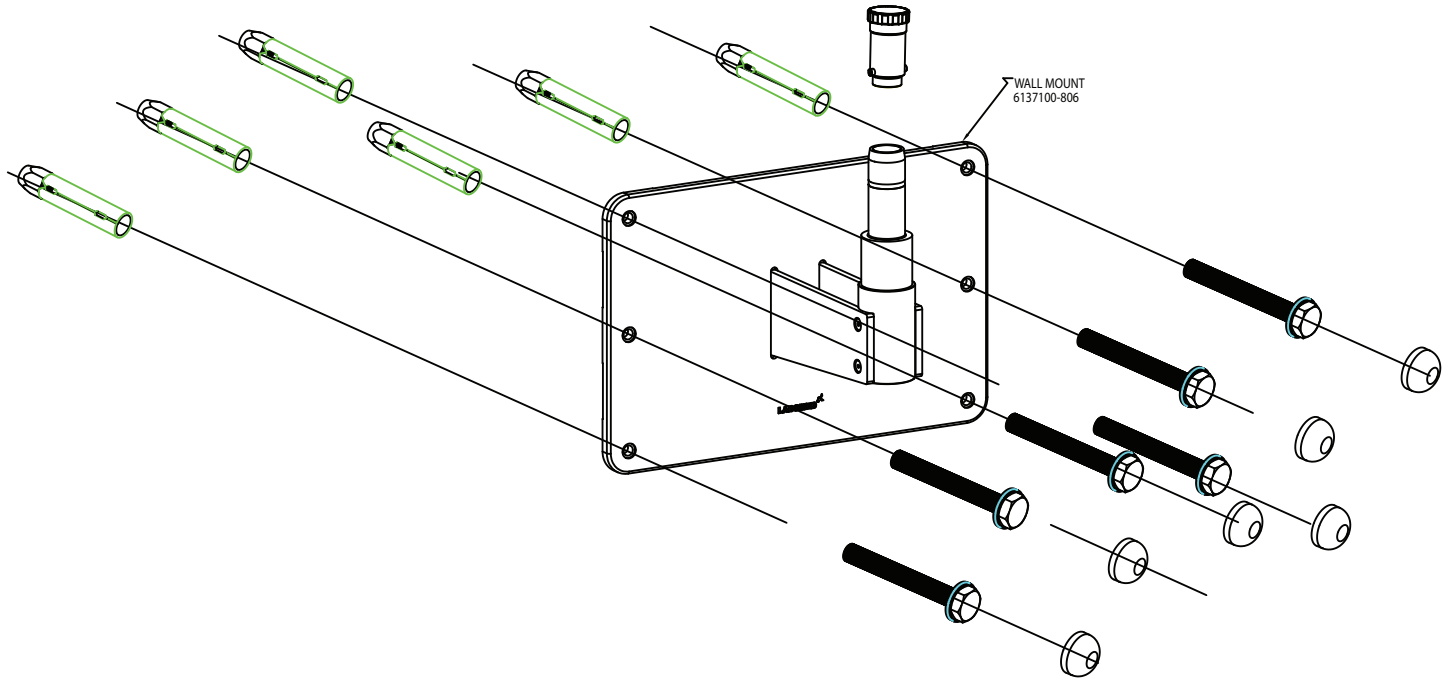

VERTICAL WALL MOUNT INSTALLATION REFERENCES(SOLID BRICK WALL)

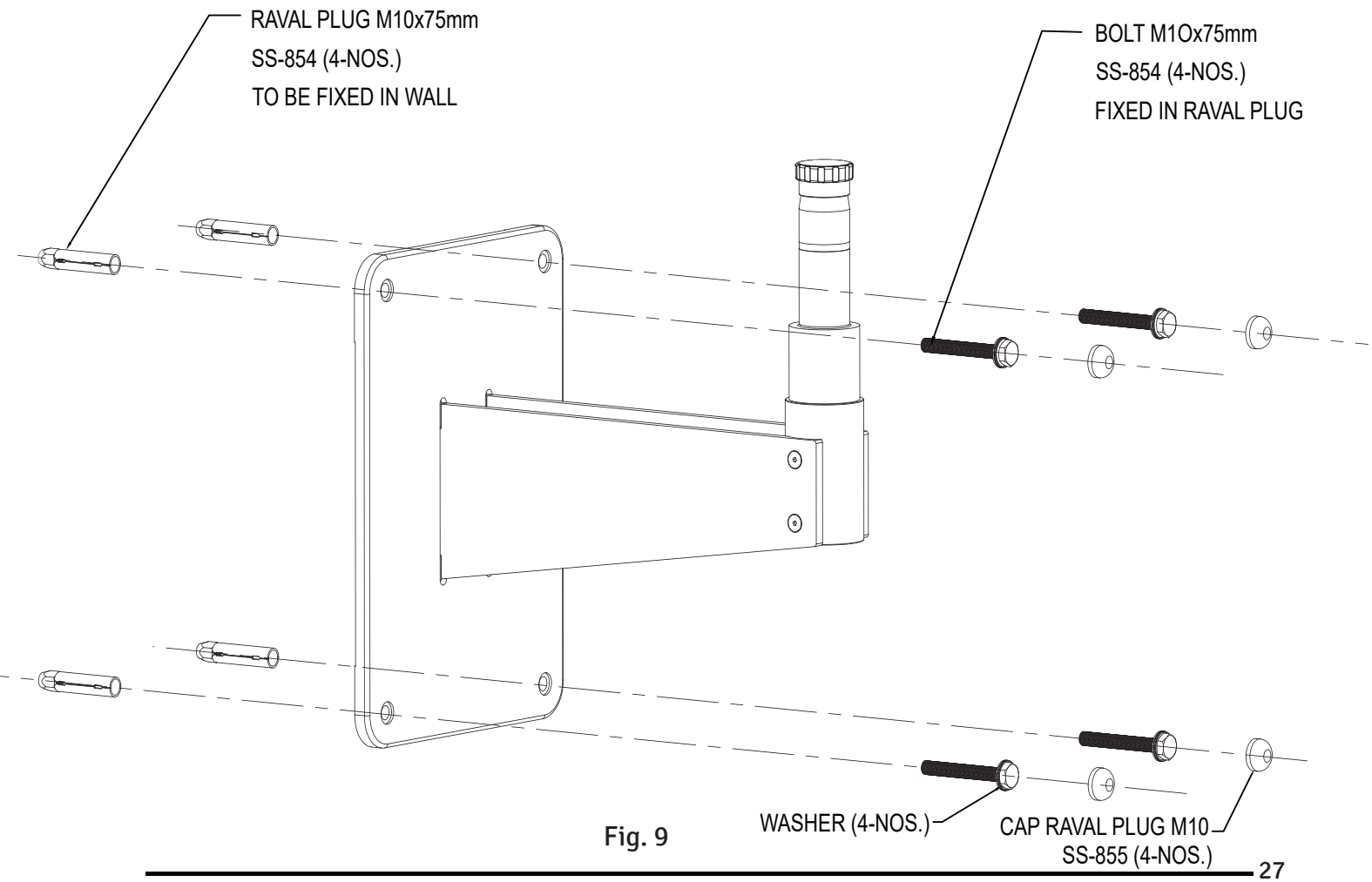

Fig. 9

INSTALLATION REFERENCES (WALL MOUNT)

WALL MOUNT WITH STANDARD SUSPENSION ARM & SWIVEL ARM WITH 8" EXTENSION ARM

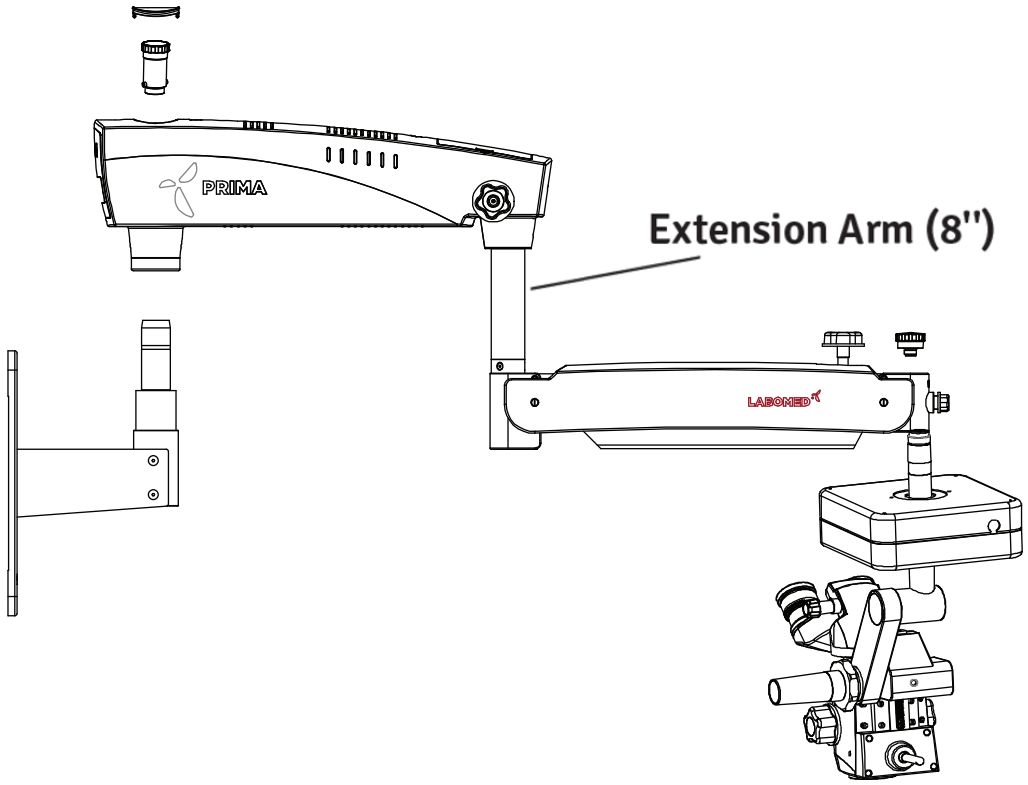

Fig. 10

INSTALLATION PREPARATION (WALL MOUNT)

WALL MOUNT INSTALLATION

Before Initiating the installation of Labomed Wall Mount Microscopes, You must ensure that there is proper space available as per the configuration selected. Refer to Figure 6 and 7.

Measure the distance between the centers of the studs. The Labomed Wall Mount Model is designed to mount directly on a wall with wood studs spaced 406mm (16”) centers or on solid brick/concrete wall minimum 229mm (9”) thick wall.

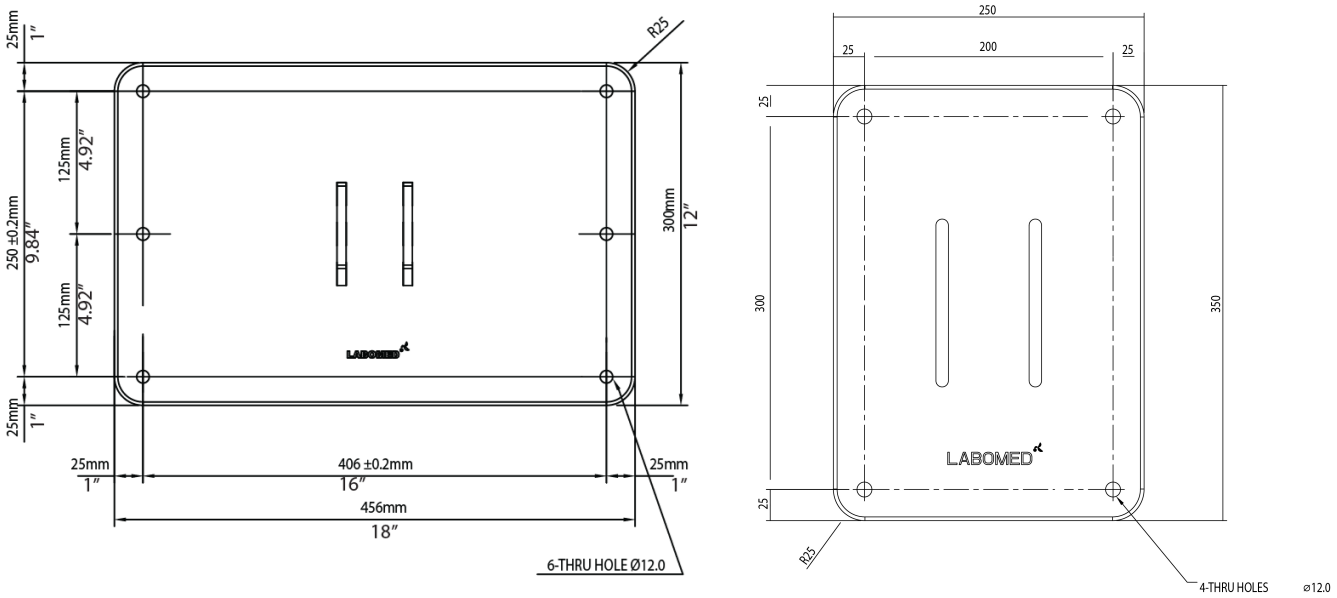

Fig . 11

LIST OF CONTENTS

1. Paper template for marking - 1
2. Wall Mount Assembly -1
3. Hexagonal Lag bolts (for wooden walls) -6
4. Plain Washer -6
5. RAWL Anchor Bolts (for Masonry walls) -6
6. Cap set bolt -6

WALL MOUNT INSTALLATION PROCEDURE

WALL MOUNT INSTALLATION ON STANDARD SIXTEEN INCH(16"406 MM) WOODEN WALL STUD SPACING

For securing the Wall Mount System to construction using wooden wall studs spaced on 16 (406 mm) Inch centers, it is recommended that 3/8" x 4" hex head lag screws are used.

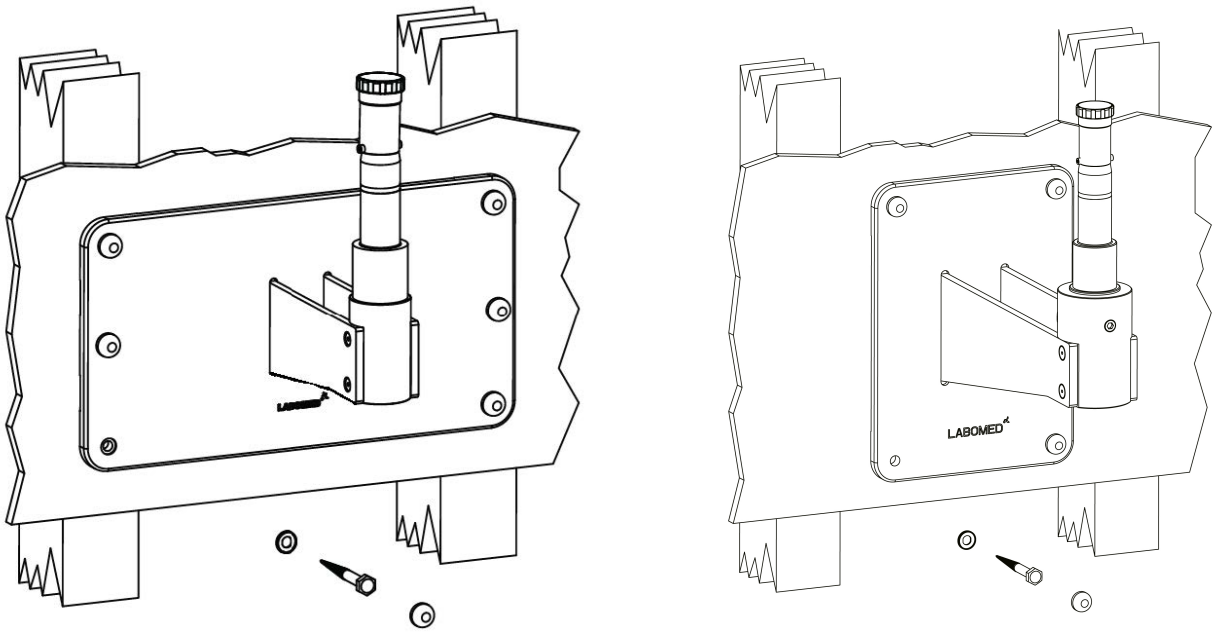

Fig. 12

WARNING: THE MOUNTING HARDWARE SUPPLIED FOR WOODEN WALL IS NOT DESIGNED FOR INSTALLATION TO WALL WITH STEEL STUDS OR TO CINDER BLOCK/MASONRY WALLS.

WALL MOUNT INSTALLATION PROCEDURE(continued)

LEVELING THE WALL MOUNT PLATE ASSEMBLY

It is important to ensure that wall mount (6137100-806) is level both horizontally and vertically, after installation. Leveling of the wall mount assembly is necessary to prevent the microscope system from drifting from side to side when it is being used at full extension.

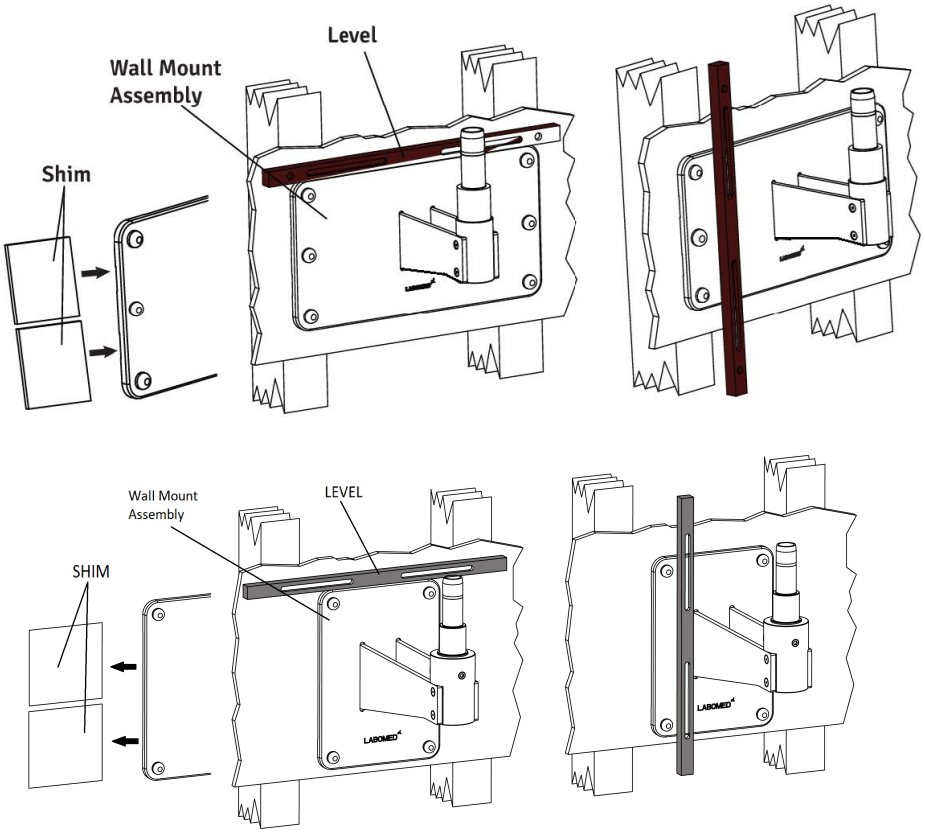

Fig . 13

1. Slightly tighten the bolts on the top side- leaving the bottom bolts slightly loosened.
2. Place a level across the top of the back plate to check the horizontal leveling. See Figure 13 .
3. Use the 17mm socket and ratchet to slightly loosen the 3/8” x 4" hex head lag screws in the corners of the back plate.
4. Adjust the back plate until it is level and tighten the three lag screws on the bottom leaving the top lag screws loosened slightly.
5. Place a level vertically along the face of the wall Mount, on both sides, to ensure it is perpendicular to the floor. See Figure 13 .
6. If the wall mount is not perpendicular, insert shim material between the wall mount and the wall next to the lag screws Refer figure-13.
   Check with the level and tighten the lag screws once the mount is level.
7. Check the other side and insert shims as needed and then tighten the lag screws.
8. When the Wall Mount is level, both horizontally and vertically, securely tighten all Six lag screws.

WALL MOUNT INSTALLATION PROCEDURE(continued)

WALL MOUNT INSTALLATION ON SOLID BRICK MASONRY WALL MINIMUM 9” THICK

For securing this Wall Mount Model to a Solid Brick wall, Use the Six(6) M10 X 75mm RAWL Anchor bolts provided. See Figure below.

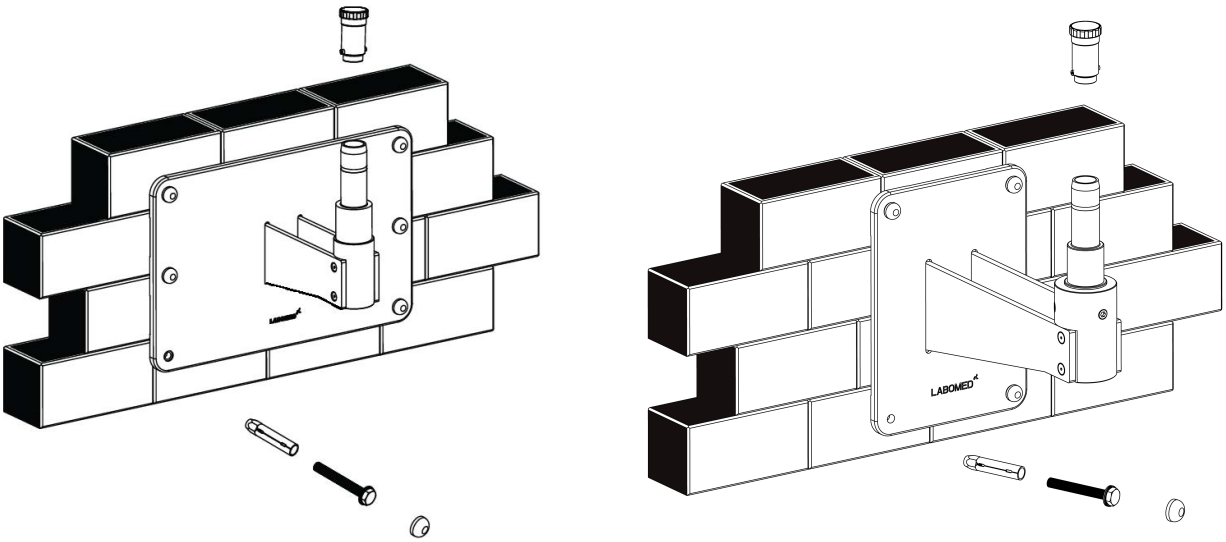

Fig . 14

1. Determine the desired location on the wall where the microscope is to be mounted.
2. Place the Paper template against the wall and fix with tape. Mark Six (6) holes ensuring template is straight.
3. Using a 16mm” masonry drill bit, drill Six (6) 16mm holes min 65mm deep in the wall spaced as Outlined above.
4. Use 10mm X 75mm long RAWL Anchor bolts.
5. Place the RAWL bolts through the holes and carefully insert the bolts into the wall.
6. Take out the threaded bolt.
7. Position the wall mount against the wall .Place flat washer under head of coach bolt and thread in the Six (6) RAWL bolts in the wall.
8. Using a 17mm socket and ratchet arrangement, tighten the Six (6) RAWL bolts securing the wall mount into position. Ensuring the wall mount (top edge and front face) is level.

NOTICE: Shims and shim materials are to be provided by the customer and are not furnished by Labomed. There are numerous shims materials commercially available and no specific type or brand name is implied.

WALL MOUNT INSTALLATION PROCEDURE(continued)

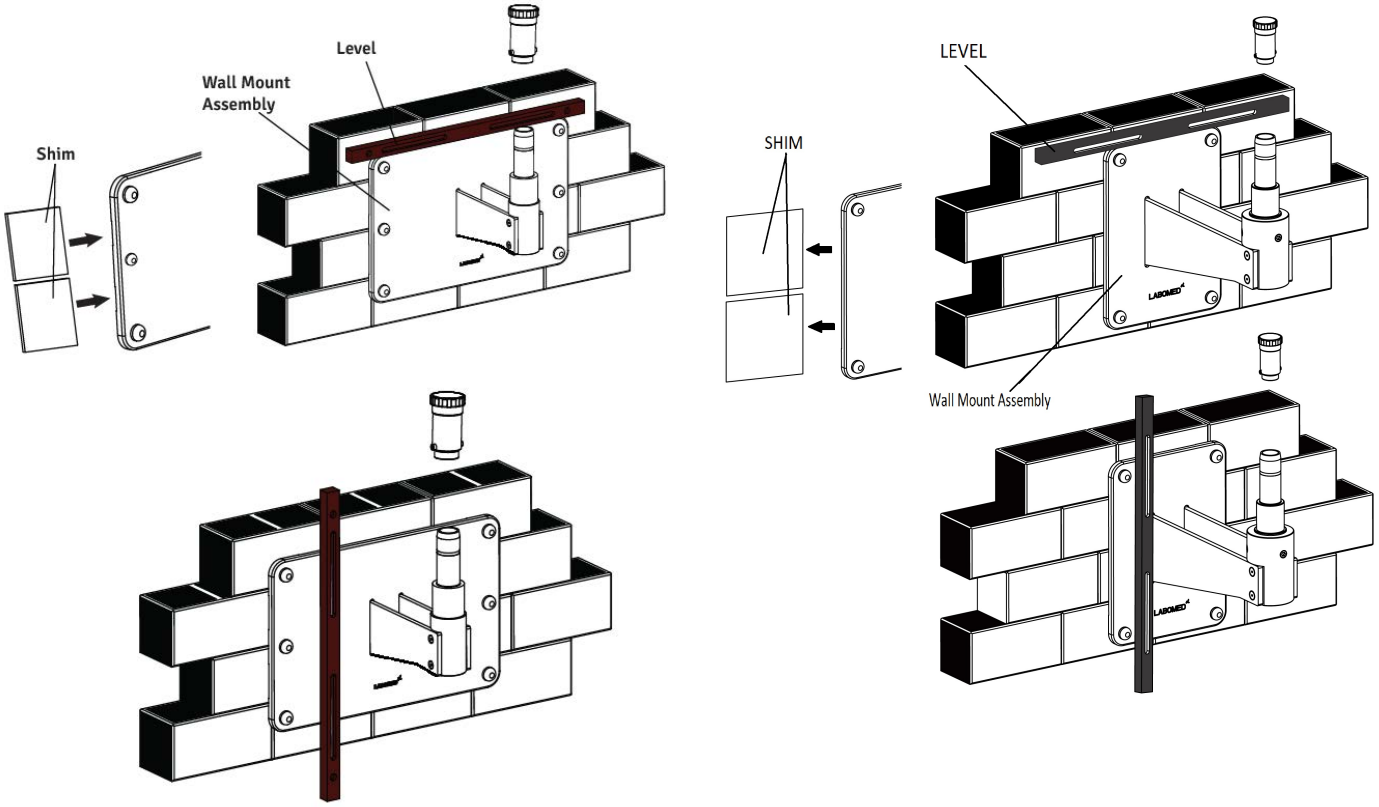

Fig. 15

WALL MOUNT INSTALLATION PROCEDURE(continued)

LEVELING THE WALL MOUNT ON MASONRY WALL

1. Slightly tighten the bolts on the top side- leaving the bottom bolts slightly loosened.
2. Place a level across the top of the back plate to check the horizontal leveling. See figure-15.
3. Use a 17mm Socket & Ratchet arrangement to slightly loosen the Six (6) toggle bolts in the corners of the back plate.
4. Adjust the wall mount until it is level and tighten the three RAWL bolts on the bottom leaving the top toggle bolts loosened slightly.
5. Place a level vertically along the face of the back plate,on both sides, to ensure it is perpendicular to the floor. See figure-15
6. If the back plate is not perpendicular, insert shim material between the back plate and the wall next to the RAWL bolts. Check with the level and tighten the toggle bolts once the mount is level.
7. Check the other side and insert shims as needed and then tighten the toggle bolts. See figure-15.
8. When the back plate is level, both horizontally and vertically, securely tighten all Six toggle bolts.

INSTALLING THE HORIZONTAL ARM ASSEMBLY

1. Open the microscope arm box and take out the arm.
2. Unscrew the threaded plug from wall mount shaft as shown in fig-15.
3. Assemble the Arm on wall mount shaft referring fig.14 and Reinstall the threaded plug into place.
4. Complete the rest of Installation as per fig.1,2,3 or 4 as ordered.

WALL MOUNT INSTALLATION PROCEDURE(continued)

Constructional requirements for the wall mount

1. The 6137100 wall mount must only be installed as recommended in this manual.

2. The construction specialist responsible must confirm in writing that the applicable regional and local codes & regulations have been complyed and the points listed below are taken care. The customer must keep this confirmation with his records on the wall mount. A copy of this document must be provided to labomed representative dealer.

3. The wall Post on which the Prima wall mount is to be mounted must have the following load Capacity:
Perpendicular force: minimum 2500 N
Torque:
Perpendicular to the wall 2500 Nm minimum Parallel to the wall 2000 Nm minimum
Also take into account any additional loads acting on the wall and any other loads anchored in the wall.
The wall construction must comply the requirements.

4. The wall flange must be aligned in a vertical and horizontal direction as explained in this manual.

Note:
If an existing wall anchor plate is ever exchanged, never re-use the old anchors. New anchor holes must be drilled. When calculating the effective strength of the new anchors, make sure to take into Account the weakening effective of the holes in the wall.

5 . On the basis of the above aspects, the person responsible for the building must decide on and take responsibility for the most suitable method of anchoring.

WALL MOUNT INSTALLATION PROCEDURE(continued)

Control and Power Supply of the system

Note:
The maximum weight of the surgical microscope including accessories must not exceed 7kg and the respective weight of our accessory equipment is specified in the price list.

The weight of the mount including the surgical microscope is as follow:
Wall mount kit: Approx.....19 kg.
Surgical microscope: Approx.....18 Kg.
Total: Approx.....37 kg.

Power line: 3 X 1.5mm2
Fusing: 2.5A
Power consumption: max. 130W

LIST OF CONTENTS: Wall Mount Kit

1. Raval Plugs- 6pcs
2. Washers- 6pcs
3. Wall Mount

INSTALLATION

1. Cut the tape of one of wheel support assembly box as shown in fig.-1.

Fig 1

2. Remove the 4 no's of Foam sheets as shown in fig.-2.

Fig 2

3. Uplift the Wheel Support assembly as shown in fig.-3.

Fig 3

4. Place the wheel support genteelly on the floor as shown in fig.-4.

Fig 4

5. Uplift the top cover as shown in fig.-5 & place it close to the wheel support assembly & Kindly repeat the same procedure for other wheel support assembly as well.

Fig 5

6. Place both the wheel support assemblies on the floor close to each other & take out 2 No's. each of screws already mounted on both the wheel support assemblies Receptively with the provided Allen wrench (8mm) as shown in fig.-6.

Fig 6

INSTALLATION-Base (continued)

7. Cut the tape of Centre support assembly box as shown in fig.-7.

Fig 7

8. Remove the 2 no's of Foam sheets as shown in fig.-8.

Fig 8

9. Uplift the Centre Support Assembly as shown in fig.-9.

Fig 9

10. Place the centre Support Assembly on the wheel support assembly by aligning Corresponding holes as shown fig.-10.

Fig 10

11. Tighten 4 screws as shown in fig.-11 with the help of Allen Wrench 8mm.

Fig 11

12. Referring fig.-12 engage the top cover shown as (A) on both the wheel support assemblies now ready to use.

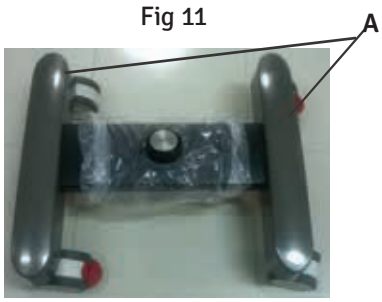

Fig 12

MICROSCOPE INSTALLATION

1. Open the microscope box. Remove column from the box. Engage this column onto the shaft by aligning three guide holes on column and shaft, shown as B in fig.-13.

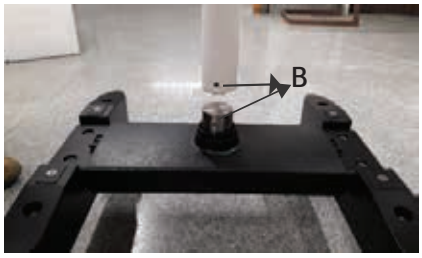

Fig 13

2. Tighten three allen screws from the sides, shown as C in fig.- 14.

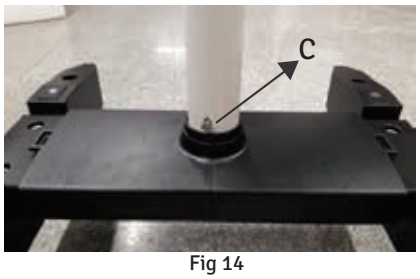

Fig 14

3. Make sure that during assembly of the column, ring (D) is fixed in place, as shown in fig.-15.

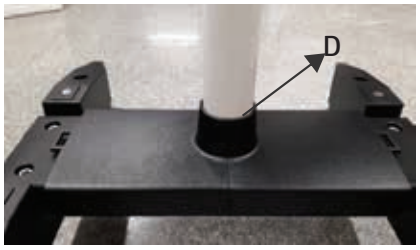

Fig 15

Retrieve the swivel arm and suspension arm assembly from the packing box and follow Instruction as below (refer fig.-3)

Ensure Loosening of swivel arm lock knob (A).

Install the swivel arm assembly on the upright holding shaft (1) fig.-3.

Lock the swivel arm with threaded plug (2) from top.

Put protective cap (3) in place and loosen suspension arm locking B knobs so that it can be rotated.

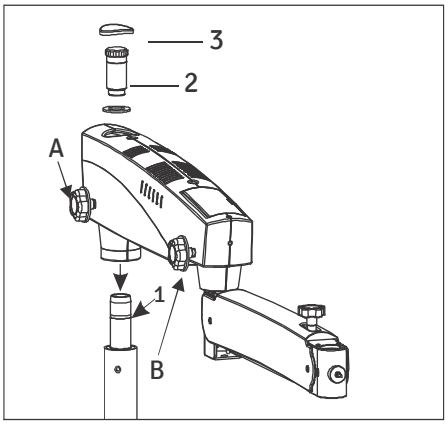

Fig.3

MICROSCOPE INSTALLATION (continued)

Retrieve the XY or Z-axis coupling assembly (as ordered) from the packing and follow as below refer Fig.5.

- Install the coupling to the suspension arm by sliding the guiding shaft (1) to the suspension arm.
- Lock the inclined coupling with the thread plug(3).
- **Ensure magnichanger handles (M) have silicone covers.**

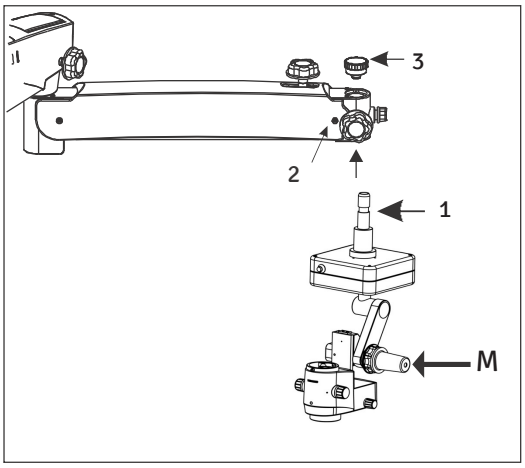

Fig. 5

Make sure that safety screw must tight in placeat position (2) to avoid sudden falling of the coupling. Safety screw tagged within the arm.

Mounting the light guide

- Switch off the illumination system
- The light guide comes pre-routed through swivel arm (that houses the LED illumination system) and the suspension arm.
- Insert the light guide into the receptacle in the microscope till it clicks into position as shown as A in fig.6 fibre cable must index in position while inserting into fibre optic mount.
- Make sure that the light guide has been routed in such a way that the carrier system and the surgical microscope are not obstructed, and that they can be moved in their entire range of movement without stretching, extreme, kinking or Twisting of the light guide.

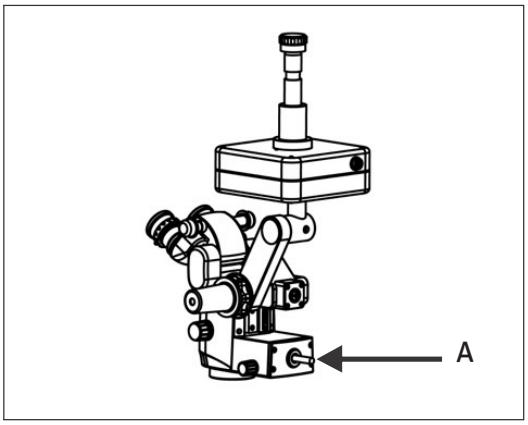

Fig. 6

Install the binocular head and eyepieces on the magni-changer. Secure the binocular head with head locking screw shown as (A) in figure 6a.

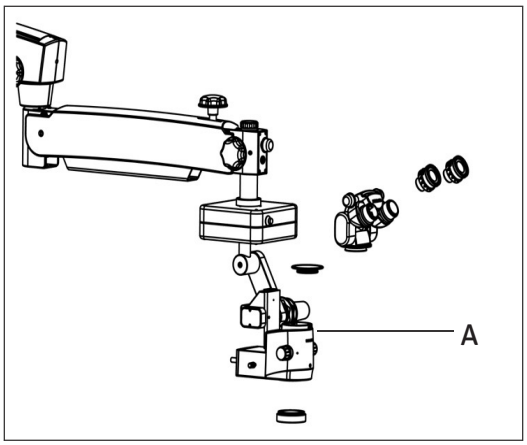

Fig. 6 a

ELECTRICAL CONNECTIONS

Connect the power cable to the AC inlet socket (2) provided on the back of the swivel arm as shown in the fig-8.

Switch on the power from on/off switch (2).

Note: Power supply is designed with universal input 100V-240V AC, 50/60Hz. To plug in follow instruction on electrical label provided at bottom of the arm as shown (3) here in fig-8.

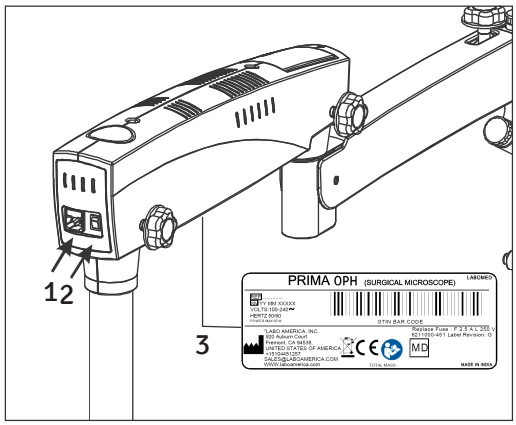

Fig. 8

CONTROLS

ON/OFF switch (shown as 2 in fig-8 above)

It is located on the back of the swivel arm. At 'ON' position, green LED glows and cooling fan starts running. Keep the intensity control knob at Minimum level before switching on the system.

To save burning life of LED, either switch OFF the microscope or raise the suspension arm in pack position when not in use.

INTENSITY CONTROL KNOB

It is located in front of the suspension arm shown as (A) in fig-9. Brightness of field of view can be adjusted as per user comfort using intensity control knob.

SWIVEL ARM LOCKING KNOB

This knob helps you to lock the movement of Swivel arm at the desired position after initial focusing of the attendance area by turning it clockwise, knob is shown as (B) in fig-9.

BRAKES

Locks the stand from unwanted movement by pressing down the two brakes provided on caster wheels. To unlock press uper portion of brake. see figure-10.

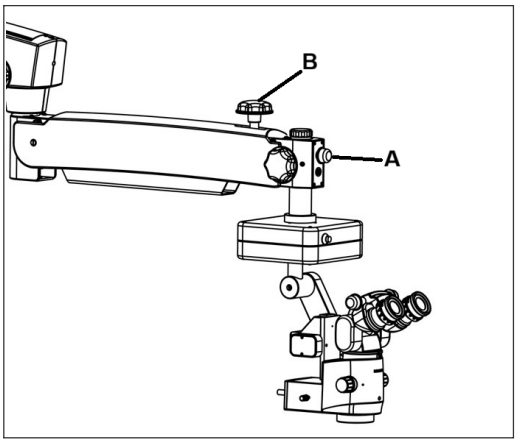

Fig. 9

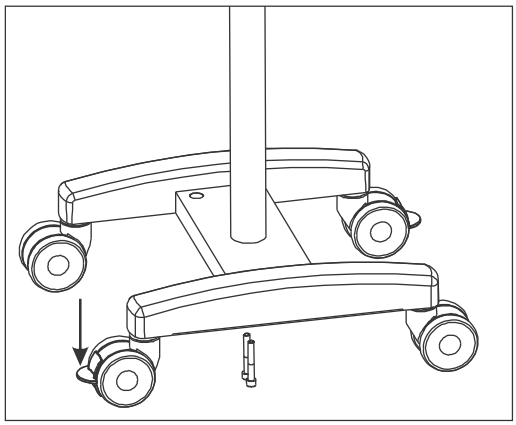

Fig. 10

PRIMA WIRING CODING DIAGRAM

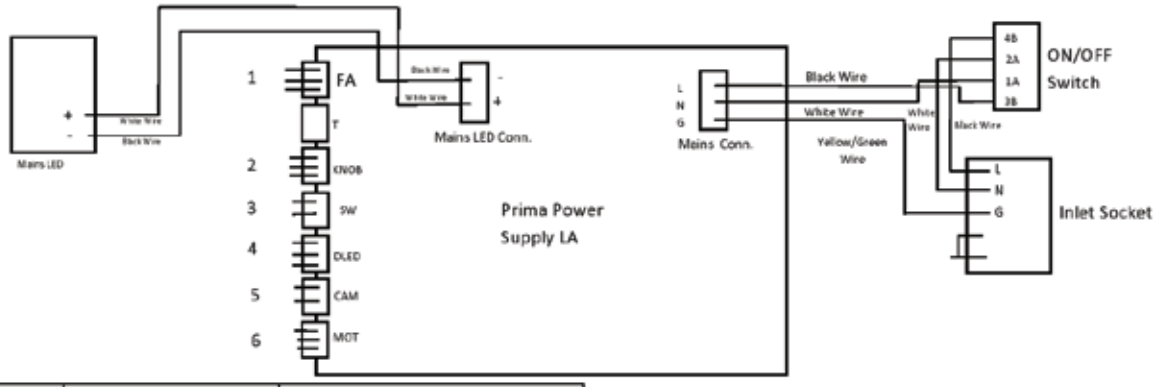

Wire Marking No.	Power Supply Marking	Description
1	FAN	Main LED Fan Wire
2	KNOB	Potentiometer Wire
3	SW	Limit Switch Wire
4	DLED	Dual LED Wire
5	CAM	Camera Wire
6	MOT	Motor Wire

INSTRUCTIONS FOR USING THE MICROSCOPE

SETTING UP OF MICROSCOPE:

1. Lock all the brakes on base wheels after setting up of microscope on the attendance area for stability.

2. Although tension on microscope is factory preset as per the ordered configuration. Still user can adjust up and down force by tuning the allen screw clockwise or anticlockwise with the help of a 8.0mm allen wrench. Refer fig.-11 to see the exact location of tension adjusting screw.

3. Lock the Up & Down movement of suspension arm using locking knob (B) in fig.-9 after coarse focusing of the attendance area.

4. Adjust the eye distance as per IPD scale according to your convenience.

5. The illumination is controlled through the control knob (A), fig.-11. Rotate it clockwise or anti clockwise to achieve desired illumination level Functional setup keep it as minimum.

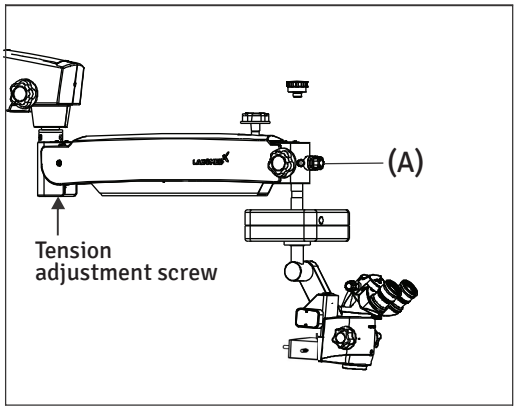

Fig. 11

SETTING UP OF MAGNIFICATION (Ref. fig.-12)

1. Adjust to highest magnification with one of the rotating knobs (12a) provided at magnification changer.

2. Fine focusing is done through foot paddle

3. Absolute centering of observation area in field of view can be done by manual handle (12c).

4. Make sure that the magnification changer is engaged in the index point at the clock stop Position.

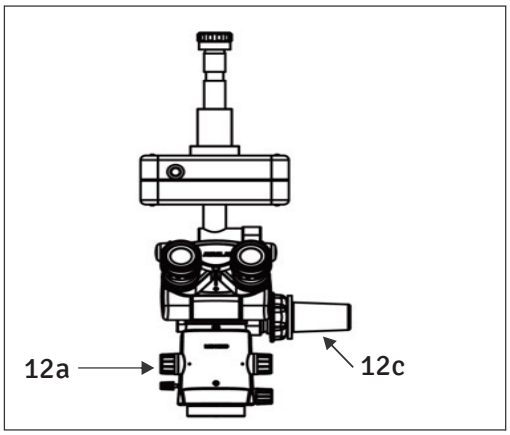

Fig. 12

INSTRUCTIONS FOR USING THE MICROSCOPE

INTENDED USE:

The PRIMA OPH surgical microscope has been designed for surgical procedures in the field of ophthalmology, i.e. the microscope meets the special requirements of this discipline.

DESCRIPTION OF THE MODULES

The PRIMA OPH surgical microscope comprises the following modules:

1. X-Y COUPLING

The X-Y coupling allows fine, motorized positioning of the surgical microscope in a horizontal plane. The range of travel is 50mm x 50mm.

The X-Y coupling is provided with a reentering facility. Then you press the red activator button shown as (A) in fig.-13

- the X-Y coupling adopts its center position
- XY movement is done through joystick provided foot control.

Z axis movement: Z axis coupling allows fine Motorized focusing of the area of interest within a travel range of 40mm Two foot paddles are provided on the foot control to facilitate up and down movement of Z-axis.

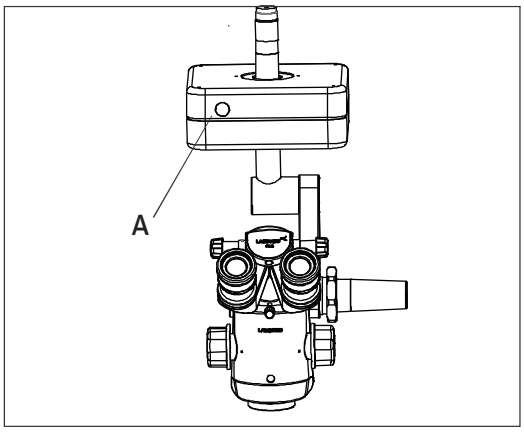

Fig. 13

2. SUPPORT ARM FOR THE SURGICAL MICRO-SCOPE

The Support contains a tilt device, allowing the viewing direction of the surgical microscope to be adapted to the surgical field as required, maximum tiltation is 90° forward.

3. MAIN MICROSCOPE

The Max lite coated optics of the main microscope provide superb optics quality. The microscope image displays optimum contrast and excellent detail recognition along with a large depth of Field.

The bright microscope image is a particular benefit in vitreoretinal surgery.

The objective lenses with the focal lengths of 175mm and 200mm are available for different working distance.

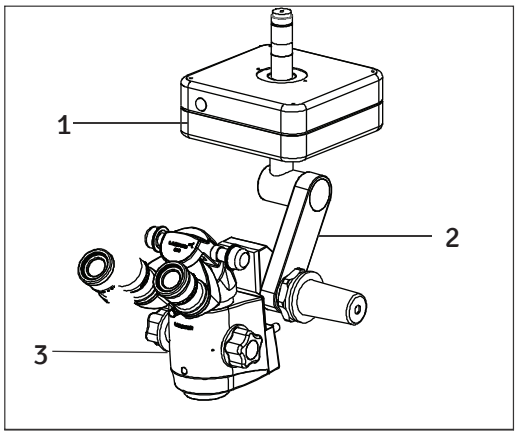

Fig. 14

INSTRUCTIONS FOR USING THE MICROSCOPE

The ergonomic 45 or 210 degree binocular tube is provided for the main surgeon. The large tilt range allows work with minimum fatigue.

The standard equipment includes eyepieces with a magnification factor of 10x (option: 12.5x).

CHANGING THE OBJECTIVES / EYEPIECES

1. The objectives can be taken out by rotating it in anti-clock wise direction. It can be threaded in by rotating in clock wise direction.

2. To install the eyepieces, insert in the eye tubes of observation head.

3. A range of objectives/eyepieces can be selected by choice.

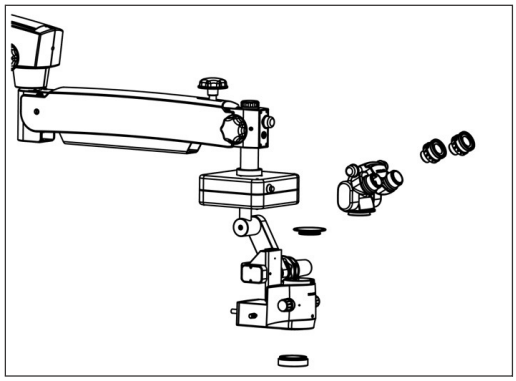

Fig. 15

REPLACING THE ILLUMINATION SOURCE

Open the swivel arm cover's. Detach the fibre optic cable and replace the illumination assembly A with new assembly. Secure back the arm cover's.

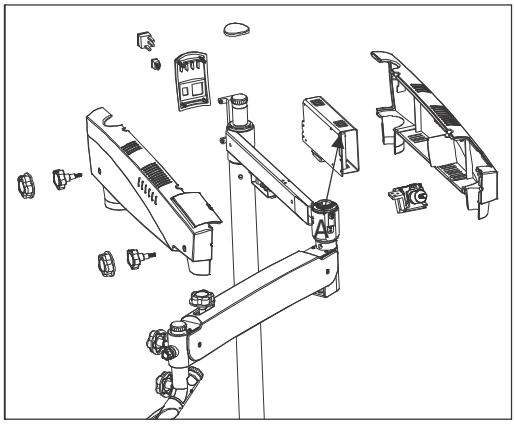

Fig. 16

FUSE REPLACEMENT

The fuse is located with AC inlet, provided near the on/off switch. Use a flat head screw driver to open the fuse compartment. Two fuses
are provided in this, i.e. one is live fuse and second as spare fuse. Replace the blown fuse with live fuse and secure back the fuse compartment.

For fuse replacement refer label shown in fig.-17.

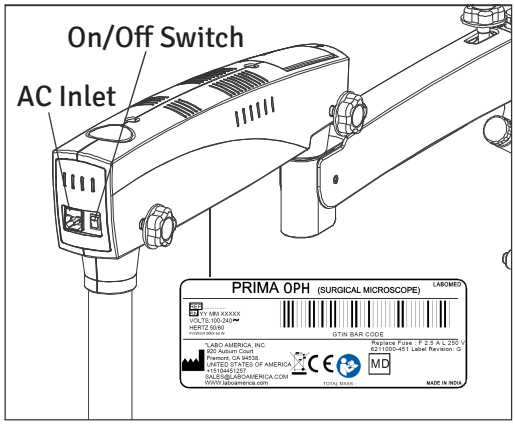

Fig. 17

THERMAL CUT-OFF

Although instrument is designed for safe working condition thru sufficient cooling facility provided with proper free and forced air circulation by the fans provided in electrical box.
Further instrument is designed with a inbuilt safety mechanism with “auto thermal cut-off” if the temperature of LED is above 70°C. In case if thermal cut-off fails, no risk will happen to the instrument, only LED may get fuse. Here user needs to replace the LED only and thermal cut-off will start working again. To replace LED user may call LABOMED service personal or authorized dealer.

LED Specification: 3.7V 13.5 Amp

ADJUSTMENT OF TENSION WHILE USING ACCESSORIES

After Supplementary accessories are mounted the additional load of suspension arm must be compensated by adjusting tension on tension control screw provided on suspension arm by moving it clock wise or anticlockwise.

Refer fig. 18

1. Remove plate as shown by unscrewing two screws.

2. Loosen as much as possible the two allen bolts by using allen wrench of 4mm as shown in fig.-19. Note that these two screws will not come out.

3. Use hexagonal wrench of 8mm in bolt (A) shown in fig.-20 Rotate it clockwise to increase desired tension on Gas spring or vice versa.

4. After achieving the desired tension on gas piston, Re tighten the two screw back as shown in fig.- 19

5. Put back the plates shown in fig.-18 in its position

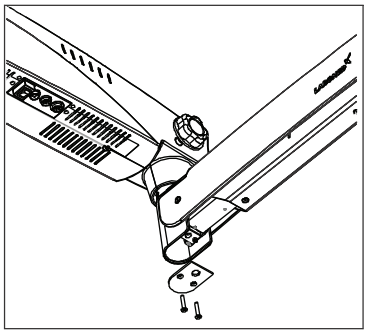

Fig. 18

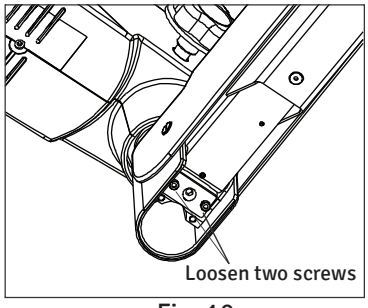

Fig. 19

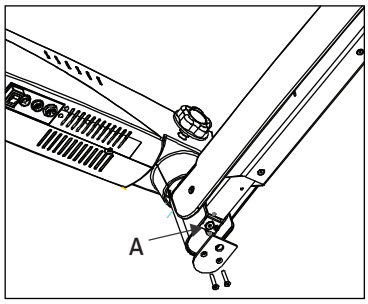

Fig. 20

MOVING POSITION

Position of the system for safe transportation.

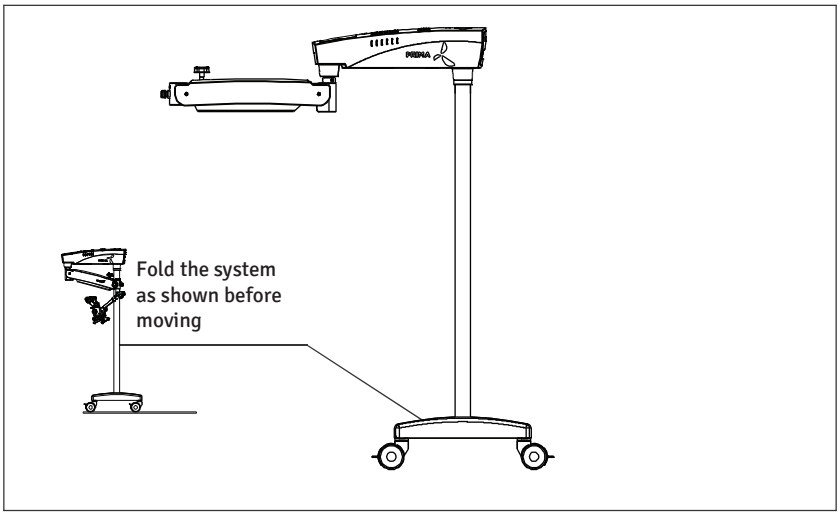

RELOCATING THE STAND

- Turn off the unit at the power switch.
- Disconnect the power cable from line power.
- Remove the video cable from the video modules (e.g. video monitor. USB monitor) and the camera control unit.
- Release locks by pressing the upper parts of the locks downwards.
- Bring the unit into its moving position.
- Be careful of heights when passing through doorways.
- Avoid collision of any kind.
- Do not go over steps and edges: the stand might topple!
- Be extremely careful when moving over slopes.
- Do not park the stand on slopes.
- Press lock downward.
- Check whether the stand is locked in position.

CLEANING AND SERVICING

CARE & MAINTENANCE (Fig.-11)

This instrument is a high grade technological product and not required any special periodical Maintenance if handed carefully. To ensure optimum performance and safe working order of the Instrument, its safe functioning must be checked once every 12 months as per table below. We Recommended having this check performance by our service representative as part of regular Maintenance work. If a failure occurs which you cannot correct using the trouble-shooting table, Attach a sign to the instrument stating out of order and contact our service representative for servicing Part or circuit diagram etc.

Surgical Microscope Maintenance/Servicing Check

Microscope: - **Owner: -** **Month: -** **Year:-**

Date of Purchase:

	1	2	3	4	5	6	7	8	9	10	11	12	13	14	15	16	17	18	19	20	21	22	23	24	25	26	27	28	29	30	31
DAILY AFTER USE																															
Wipe of any oily marks/finger prints from eye piece & CMO other Optical parts with lens paper																															
Turn off Microscope																															
Replace Dust Cover																															
Each Month																															
Clean microscope body with water moistened tissue																															
Use lens cleaning fluid on lens tissue to wipe lenses																															
Remove Fibre Optical Cable and clean																															
6 monthly																															
Service Inspection																															
Smooth Function of Locking Knobs																															
Smooth Functioning of Torque Adjustment Mechanism on Suspension Arm																															
Rotary Motion of Carrier																															
INITIALS																															

CARE INSTRUCTIONS:

- Keep accessories away from dust when not in use, e.g. protect them from dust cover.
- Remove dust with a pneumatic rubber bulb and soft rush.
- Use special optics cleaning cloths and pure alcohol for cleaning lenses and eyepieces.
- Protect your colposcope from moisture, fumes, acids and cosmetic materials. Do not store chemicals close to the instrument.
- Protect it from improper handling. Never install other devices sockets or unscrew optical system and Mechanical parts unless explicitly instructed to do so in this manual.
- Protect the microscope from oil and grease. Never oil or grease the guide surfaces or mechanical parts.
- Remove coarse contamination using a damp disposable cloth.
- Use disinfectants based on the following ingredients: aldehyde, alcohols, quaternary ammonium compounds.

CLEANING AND SERVICING (continued)

- Camera: Clean optical components using a lint-free cloth. Soak the cloth using a little methanol or glass cleaner. Do not use ethanol and spirit.
- Do not clean products and optical components in a cleaning/disinfecting device or ultra sound bath.
- LABOMED Maxi Lite coatings are fungal resistant. If you clean as described above, the coatings will not be damaged.

TROPICAL ENVIRONMENT/FUNGUS:

LABOMED employs certain safety precaution in its manufacturing techniques an and materials. other Preventive measures include:

- Keep optical parts clean.
- Use and store them in a clean environment only.
- Store under UV light when not in use.
- Use in continuously climate-controlled rooms only.
- Keep moisture away using silica gel and cover with a plastic cover.

OCCUPATIONAL SAFETY AND HEALTH PROTECTION:

Observe work safety and health protection of persons responsible for processing contaminated products.

Current regulation of hospital hygiene and prevention of infection must be observed in the Preparation, cleaning and disinfection of the products.

INSTRUCTIONS

WORKPLACE:

Remove surface contamination with a paper towel.

REPROCESSING:

Recommended reprocess a product immediately after use or as & when required as per below cleaning instructions.

CLEANING & SERVICING:

Needed: water, detergent, spirit, microfiber cloth

- Take a Linen or any soft cloth. Moist it Slightly with running tap water (<40°C), using a little detergent and clean the metallic and plastic parts.
- Clean all optical components with spirits or alcohol.
- Dry optical components using a microfiber cloth; dry the rest of the product using a paper towel.
- For servicing as and when required, inform LABOMED after- sales service department.

AUTOCLAVING:

The rubber caps, sleeves and grips supplied by labomed are recommend for the following program for autoclaving:

Temperature:	134° C
Time:	10 minute
Instrument:	Standard, Autoclave

CLEANING AND DISINFECTION

FOLLOWING DISINFECTANTS ARE RECOMMENDED FOR CLEANING AND DISINFECTION

1. For cleaning and disinfecting the external painted, powder coated, anodized, plastic, Screen printed and bare metal parts:
Use Normal household bleach (Sodium hypochlorite 5%)- strength 5000 ppm(10 parts water 1 part bleach).

2. For cleaning of optical surfaces:
Use 70% Isopropyl alcohol.

PROCEDURE

- **Take a muskin cloth.**
- **Moist it to feel wet.**
- **Disinfect/clean the surface gently without much hand pressure by pulling the wipe from one end to other end. Do not rub the parts for cleaning.**

NOTE:

1. **Use mask and Gloves while performing cleaning and disinfection.**
2. **While cleaning, muslin cloth should not be dripped wet to prevent seepage and rusting to running/bare parts.**
3. **Alcohol is flammable, its use as a surface disinfectant should be in well-ventilated spaces only.**

AMBIENT REQUIREMENT

For operation	Temperature Rel. humidity (without condensation) Air pressure	+10°C....+40° C 30%.....90% 700hPa.....1,060hPa
For transportation and storage	Temperature Rel. Humidity (without condensation) Air pressure	-40°C.....+70°C 10%.....100% 500hPa.....1,060hPa

The device is subjected to conformity assessment procedure complying with Article 52 (7) and technical documentation accordance to Annexure Il and III of council regulation (EU) 2017/745. These Devices are Class 1 (without a measuring function and non-invasive) per Rule 1 annex VIII of the regulation MDR 2017/745. All the colposcopy provided with the CE mark indicates agreement with the legal Stipulations.

TROUBLESHOOTING TABLE

This instruments a high grade technological product and not required any special periodical Maintenance if handed carefully. To ensure optimum performance and safe working order of the Instrument, its safety must be checked once every 12 months. We recommended having this check performance by our service representatives as part of regular maintenance work. If a failure occurs which you cannot correct using the trouble-shooting table, attach a sign to the instrument stating out of order and contact our service representative for servicing part or circuit diagram etc..

PROBLEM	POSSIBLE CAUSE	REMEDY
No Illumination at all	Power cable not plugged	Plug in power cable.
	Power switch not pressed	Press power switch
	Defective instruments fuse	Change instrument fuse
	Defective power cable	Change power cable
	Line power failure	Contact in-house Technician
	Failure of suspension system electronics	Contact service dept.
	Light guide not properly inserted in arm or microscope.	Insert light guide properly to get maximum illumination
Insufficient Illumination	Brightness level set too low	Adjust brightness using the brightness control knob
	Light guide not properly inserted in arm or microscope.	Insert light guide properly to get Maximum illumination
	Defective light guide (illumination not uniform)	Chance light guide.
Surgical field illumination inoperative or blinks	Light guide not properly inserted in microscope arm	Insert light guide as far as it will go
	Failure of electronics	Illumination surgical field using an or illuminator. Contact service dept.
	Switch off via micro switch on suspension system	Move suspension arm of suspension system into working position

TROUBLESHOOTING TABLE (continued)

PROBLEM	POSSIBLE CAUSE	REMEDY
	Thermal cut-off in lamp housing is contaminated.	Clean thermal cut-off with a dry brush; blow it clean, if necessary.
	Defective fan. Failure of system electronics.	Contact service dept. Illumination surgical field using an or illuminator. Contact Service dept.
Up & Down motion of screw on suspension system too stiff.	Friction adjustment screw on suspension system tightened too firmly.	Loosen friction adjustment screw on suspension system as require.
Microscope Unstable.	Brakes on wheels not used.	Use Brakes.
No image visible in field of view.	Magnichanger is not Indexed properly.	Index magnichanger properly.

DISPOSAL

Disposal must comply with locally applicable laws & regulations.

SPECIFICATIONS

Technical Data (Specifications)

Binocular tubes:	45° Inclined head, IPD 55-75mm
Eyepieces:	WF 10x/16mm with eye guards; optional WF 12.5x/16mm.
Apochromatic magnichanger:	0.4x, 0.6x, 1.0x, 1.6x & 2.5x
Objective:	f=200, motorized fine focus, Optional: f=175mm, motorized fine focus
Light source:	50W LED
Maximum Wattage:	200W
LED Specification:	3.7V 13.5Amp
Built-in-filters:	Green & Blue
Maximum extention of Arm	1125mm
Vertical movement of arm:	550mm
Microscope carriers: X-Y Travel Z- Axis Travel	Motorized XY Travel and Z- Axis focus control 50 x 50 mm 40mm
Foot Control	6 Speed Foot Control
Accessories:	Assistant Binocular attachment, Double Beam Splitter 50:50 and 80:20/70:30; 0-210° inclinable ergo tube CMO- 175 fixed CMOS Adapter
Type:	Floor stand
Base (Dimensions):	600mm width 620mm length
Stand Height:	1733mm
Weight of complete microscope:	90Kg. Approx.
Stand Height in Horizontal Position:	1100mm

GUIDANCE TABLES

Guidance and Manufacturer's Deceleration **Electromagnetic Emissions** All Equipment and Systems		
Guidance and Manufacturer's Declaration - Electromagnetic Emissions		
The Prima OPH is intended for use in the electromagnetic environment specified below. The customer or user of the Prima OPH should ensure that it is used in such an environment.		
Emissions Test	**Compliance**	**Electromagnetic Environment Guidance**
RF Emissions CISPR 11	Group 1 Class A	The Prima OPH uses RF energy only for its internal function. Therefore, its RF emissions are very low and are not likely to cause any interference in nearby electronic equipment.
Harmonics IEC 61000-3-2	Class A	The Prima OPH is suitable for use in all establishment, other than domestic, and those directly connected to the public low voltage power network that supplies buildings used for domestic purposes.
Flicker IED 61000-3-3	Complies	

GUIDANCE TABLES

Guidance and Manufacturer's Deceleration

Electromagnetic Emissions

All Equipment and Systems

Guidance and Manufacturer's Deceleration - Electromagnetic Emissions

Prima OPH is intended for use in the electromagnetic environment specified below. The customer or user of the Prima OPH should ensure that it is used in such an environment.

Immunity Test	IEC 60601 Test Level	Compliance Level	Electromagnetic Environment - Guidance
ESD IEC 61000-4-2	± 6kv contact ± 8kv Air	± 6kv contact ± 8kv Air	Floors should be wood, concrete or ceramic tile. If floors are synthetic, the R/H should be at least 30%.
EFT IEC 61000-4-4	± 2kv Mains ± 1kv I/Os	± 2kv Mains ± 1kv I/Os	Main power quality should be that of a typical commercial or hospital environment.
Surge IEC 61000-4-5	± 1kv Differential ± 2kv Common	± 1kv Differential ± 2kv Common	Main power quality should be that of a typical commercial or hospital environment.
Voltage dips, Dropouts, IEC 61000-4-11	>95% Dip for 0.5 Cycle 60% Dip for 5 Cycles 30% Dip for 25 Cycles >95% Dip for 5 Seconds	>95% Dip for 0.5 Cycle 60% Dip for 5 Cycles 30% Dip for 25 Cycles >95% Dip for 5 Seconds	Main power quality should be that of a typical commercial or hospital Environment. If the user of the Prima OPH requires continued operation during power mains interruption, it is recommended that the Prima OPH be powered from an uninterruptable power supply or battery.
Power Frequency 50/60Hz Magnetic Field IEC 61000-4-8	3A/m	3A/m	Power frequency magnetic field should be that of a typical commercial or hospital Environment.

GUIDANCE TABLES

Guidance and Manufacturer's Deceleration

Electromagnetic Immunity

Equipment and Systems that are NOT Life-Supporting

Guidance and manufacturer's Deceleration – Electromagnetic Immunity

The Prima OPH is intended for use in the electromagnetic environment specified below. The customer or user of the Prima OPH should ensure that it is used in such an environment.

Immunity Test	IEC 60601 Test Level	Compliance Level	Electromagnetic environment guidance
Conducted RF IEC 61000-4-6	3 vrms 150kHz - 80MHz	(v1) = 3 vrms	Portable and mobile Rf communications equipment should be used no closer to any part of the Prima OPH, including cables, than the recommended separation distance calculated from the equation applicable to the frequency of the transmitter.
Radiated RF IEC 61000-4-3	80MHz to 2.5 GHz @ 3V/m	(E1) = 3 V/m	**Recommended Separation Distance:** **d=(3.5/v1)(Sqrt P)** **d=(3.5/E1)(Sqrt P)** **80 to 800 MHz** **d=(7/E1)(Sqrt P)** **800 MHz to 2.5 GHz** Where P is the max output power rating of the transmitter in watts (W) according to the transmitter manufacturer and d is the recommended separation distance in meters (m). Field strengths from fixed Rf transmitters, as determined by an electromagnetic site survey, should be less than the compliance levels in each frequency range. Interference may occur in the vicinity of equipment marked with the following symbol.

Note 1: At 80 MHz to 800 MHz, the higher frequency range applies.
Note 2: These guidelines may not apply in all situations. Electromagnetic propagation is affected by absorption and reflection from Structures, objects and people.
*Field strengths from fixed transmitters, such as base stations for radio(cellular/cordless) telephones and land mobile radios, amateur radio, AM and FM radio broadcast, and TV broadcast cannot be predicted theoretically with accuracy. To access the electromagnetic Environment due to fixed RF transmitters, an electromagnetic site survey should be considered. The measured field strength in the location in which the ME Equipment or ME system should be observed to verify normal operation. If abnormal performance is observed, additional measures may be necessary, such as re-orienting or relocating the ME Equipment or ME System.
*Over the frequency range 150kHz to 80 MHz, field strengths should be less than [V1] V/m.

GUIDANCE TABLES

Recommended separation distance between Portable and Mobile RF Communications equipment and the Prima OPH for ME equipment and ME systems that are not Life-supporting.

Guidance and Manufacturer's Deceleration - Electromagnetic Immunity

Recommended separation distance for between Portable and Mobile RF Communications equipment and the Prima OPH

The Prima OPH is intended for use in electromagnetic environments in which radiated RF disturbances are controlled. The customer or user of the Prima OPH can help prevent electromagnetic interference by Maintaining a minimum distance between portable and mobile RF communications equipment (Transmitters) and the Prima OPH as recommended below, according to the maximum output power of the communication equipment.

Max Output Power of Transmitter (W)	Separation (m) 150kHz to 80 MHz d=(3.5/v1) (Sqrt P)	Separation (m) 80 to 800 MHz d= (3.5/E1) (Sqrt P)	Separation (m) 800 MHz to 2.5GHz d= (7/E1) (Sqrt P)
0.01	0.1166	0.1166	0.2333
0.1	0.3689	0.3689	0.7378
1	1.1666	1.1666	2.3333
10	3.6893	3.6893	7.3786
100	11.6666	11.6666	23.3333

For transmitters rated at a maximum output power not listed above, the recommended separation Distance (d) in meters (m) can be estimated using the equation applicable to the frequency of the transmitter, where P is the maximum output power rating of the transmitter in watts (W) according to the transmitter manufacturer.
Note 1: At 80MHz and 800 MHz, the separation distance for the higher frequency range applies.
Note 2: These guidelines may not apply in all situations. Electromagnetic propagation is affected by absorption and reflection from structures, objects and people.

DIMENSIONS

Wall Mount

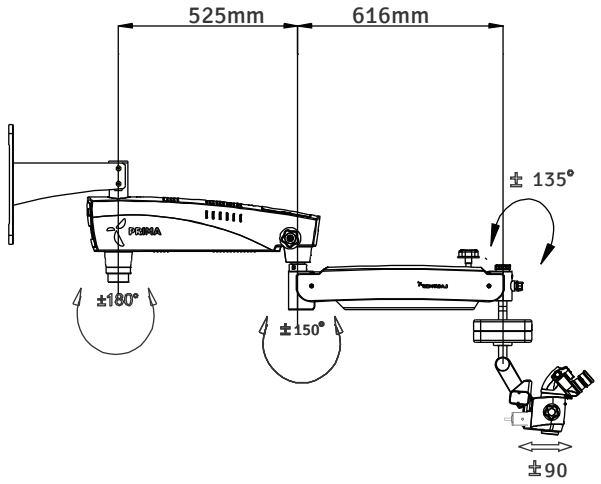

Floor Mount

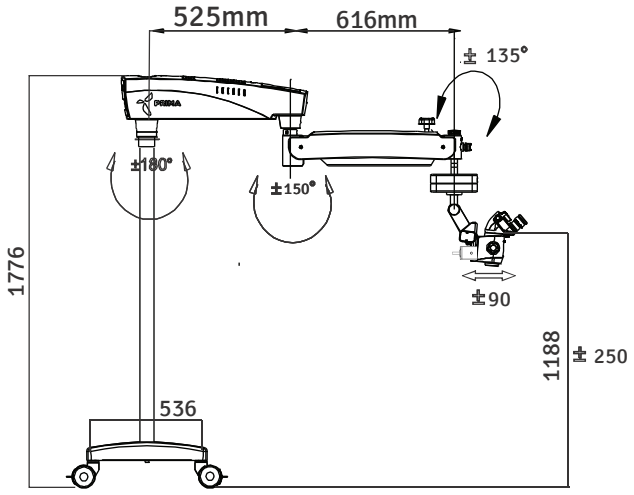

GLOSSARY

Ametropia Compensation	Compensation of short-or-far-sightedness. This can be done for each eye using the two individual eyepieces (range: +5 to -5 diopters).
Working Distance	Distance front lens to object level (250mm).
Color Temperature	Refers to the color characteristic of a light source. Using color temperature, one can set the color of a light source to warm or cold light Relative to the color of natural light. The unit of measure for color temperature is Kelvin (K).
Light field diameter	The size of the field, which is illuminated at a distance of 250mm.
Field of View Diameter	The visible area of an object that can be seen through the microscope. The greater the magnification level, the smaller the field of view and vice versa.
Green Filter	Green Filters in the ophthalmic microscope make red tissue (blood vessels) and the pink tisse of the optic nerve appear gray. Green filter also known as red free filter.
Blue Filter	Blue Filter used in conjunction with fluorescein stain — Dye pods in area where the corneal epithelium is broken or absent. The dye absorbs blue light and emits green.
Illumination Intensity	Specifies the luminous flux from a light source onto a certain area. The unit of measure for illumination intensity is Lux (Lx).
LED	Light Emitting Diode. Electronic semiconductor device that emits light when an electrical current passes through it.
Eyepiece	The optical portion facing towards the eyes, with which the enlarged image produced by the microscope can be viewed.
Convergent Beam Path	The two light beams for the right and left eye run together at a point that lies at a distance of 250mm in front of the front lens. This distance is in accordance with the working distance. This way, the eye does not has to focus on this point in its own, as it is the case with a parallel beam path.
DSLR Camera	(Digital Single Lens Reflex) camera with a digital imaging sensor.
CCD Camera	(Charged Coupled Device) camera with a technology to store a charge and move this charge out of the photo sensor in an organized way.
CMOS Camera	(Complementary Metal Oxide Semiconductor) camera in which images sensor is a silicon chip that captures and reads light.
DBS	(Double Beam Splitter) splits light beam into two directions (one to eye and one to side port) for simultaneous user viewing and photography, videography, or co-observation. Ratio of light distribution is 70% for eyes and 30% to side ports for photography, videography and co-observation.

WARRANTY

This product is warranted by LABOMED against defective material and workmanship under normal use for a period of one year from the date of invoice to the original purchaser. (An authorized dealer shall not be considered the original purchaser). Under this warranty, LABOMED's obligation is to repair or replace the defective part or product at LABOMED's discretion.

This warranty applies to new products and does not apply to a product that has been tampered with, altered in any way, misused, damaged by accident or negligence, or which has had the serial number removed, altered, or effaced. Nor shall this warranty be extended to a product installed or operated in a manner not in accordance with the applicable LABOMED instruction manual, nor to a product which has been sold, serviced, installed, or repaired other than by a LABOMED factory or authorized LABOMED Dealer.

All claims under this warranty must be in writing and directed to the LABOMED factory or its authorized dealer for this device making the original sale and must be accompanied by a copy of the purchaser's invoice.

This warranty is in lieu of all other warranties implied or expressed. All implied warranties of merchantability or fitness for a particular use are hereby disclaimed. No representative or other person is authorized to make any other obligations for a LABOMED product. LABOMED shall not be liable for any special, incidental, or consequent damages for any negligence, breach of warranty, strict liability, or any other damages resulting from or relating to design, manufacture, sale, use, or handling of the product.

PRODUCT CHANGES

LABOMED reserves the right to make changes in design or to make additions to or improvements in its products without obligation to add such to products previously manufactured.

CLAIMS FOR SHORTAGES

We use extreme care in selection, checking, rechecking, and packing to eliminate the possibility of error. If any shipping errors are discovered:

1. Carefully go through the packing material to be sure nothing was inadvertently overlooked when the unit was unpacked.
2. Call the dealer you purchased the product from and report the shortage. The materials are packed at the factory and none should be missing if the box has never been opened.
3. Claims must be filed within 30 days of purchase.

CLAIMS FOR DAMAGES IN TRANSIT

Our shipping responsibility ceases with the safe delivery in good condition to the transportation company. Claims for loss or damage in transit should be made promptly and directly to the transportation company.

If, upon delivery, the outside of the packing case shows evidence of rough handling or damage, the transportation company's agent should be requested to make a "Received in Bad Order" notation on the delivery receipt. If within 48 hours of delivery, concealed damage is noted upon unpacking the shipment and no exterior evidence of rough handling is apparent, the transportation company should be requested to make out a "Bad Order" report. This procedure is necessary in order for the dealer to maintain the right of recovery from the carrier.

Liability release for wall and/or ceiling installations:

By signing below, purchaser confirms that the correct and secure installation of mounting plates and hardware for the LABOMED Prima microscope(s) purchased is the sole responsibility of the purchaser and appointed contractor, and will comply with applicable building codes and good practices. Labo America, Inc. and all of its affiliates will be held harmless and will not bear any liability for damage and/or injury caused by improperly installed and secured mounting plates and hardware.

Purchaser's name and address:

_____

_____

_____

Project location (if different from the above):

_____

_____

_____

Licensed contractor/company name and details (address, lic #, phone number):

_____

_____

_____

Client Signature:

Date:

Contractor Signature:

Date:

Labo America, Inc.
920 Auburn Court
Fremont CA 94538
U.S.A.

Fax: 510-445-1317
Global: sales@laboamerica.com
www.laboamerica.com

LABOMED®
ideas for vision

Manufactured By:

Labotech Microscopes India Pvt. Ltd.

19-HSIDC, Industrial Estate, Ambala
Cantt - 133006 Haryana (INDIA)

sales@labomedworld.com
www.labomedworld.com

EC REP

Labomed Europe b.v
Essebaan 50
2908 LK Capelle aan den IJssel
The Netherlands
Tel: +31 (0)10 4584222
Fax: +31 (0)10 4508251
E-mail: info@labomedeurope.com
www.labomedeurope.com

CE

A16372 UL REGISTERED FIRM ISO 13485:2016
LABOTECH MICROSCOPES INDIA Pvt Ltd