Prima pro

Operating Surgical Microscopy

User Manual

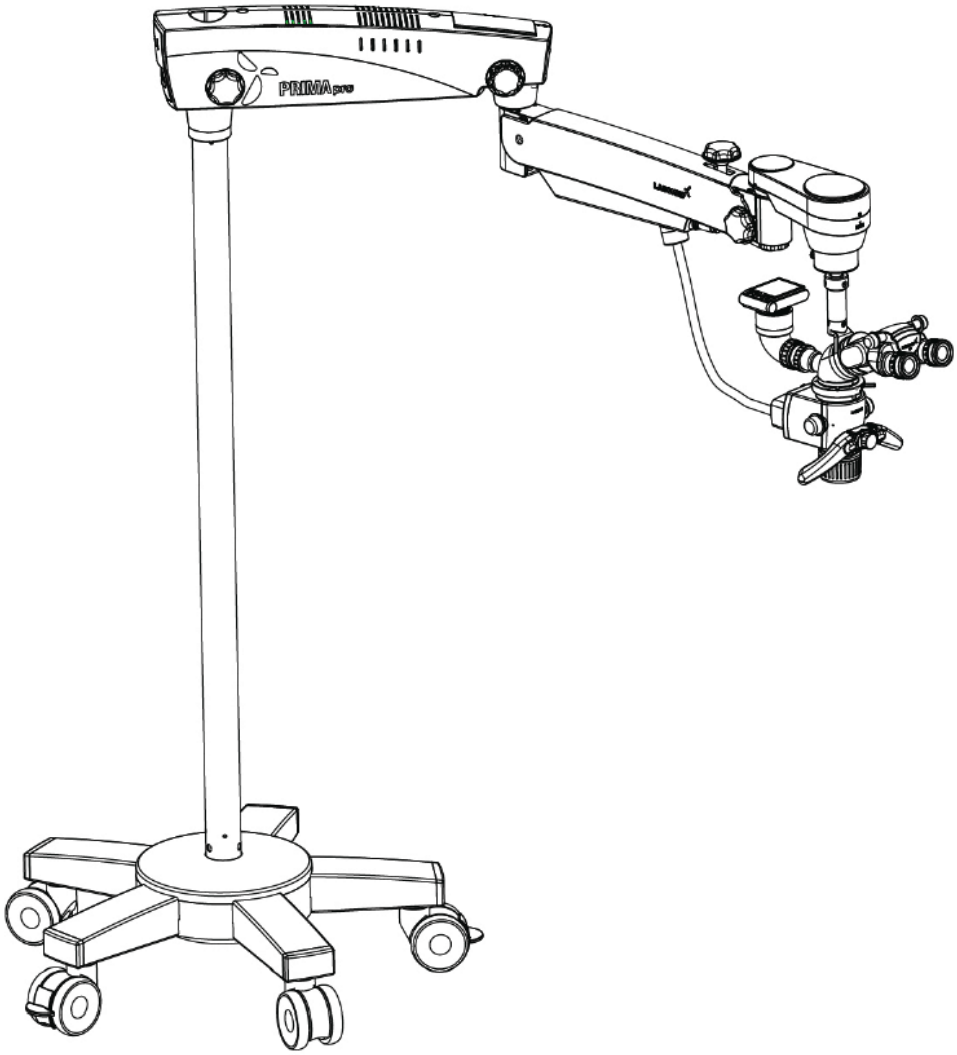

To ensure proper use of this instrument as well as to avoid injury while operating instrument, understanding this manual Completely before use is highly recommended.

PRIMA Pro is a Trade name of LABOMED Dental Microscopes.

LABOMED is a registered trademark of Labo America, Inc.

All other trademarks are the property of their respective owners.

The information contained in this document was accurate at the time of publication. Specifications are subject to change without prior notice. LABOMED reserve the right to make changes to the product described in this user manual without notice and without incorporating those changes in any products already sold.

LABOMED products are designed and manufactured under quality processes that meet Quality Management Services requirement in compliance with ISO 13485.

No part of this publication may be reproduced, stored in a retrieval system, or transmitted in any form or by any means: electronic, mechanical, recording, or otherwise, without the prior written permission of LABOMED

TABLE OF CONTENTS

1.	INTRODUCTION AND INTENDED USE	1
2.	PRODUCT DESCRIPTION (FLOOR MOUNT)	2
3.	PRODUCTION DESCRIPTION (CEILING MOUNT)	3
4.	INSTALLATION REFERENCES (CEILING MOUNT)	4-8
5.	CEILING MOUNT INSTALLATION	9
5.a.	DROP CEILING APPLICATIONS	9
5.b.	LEVELING THE CEILING MOUNT SYSTEM	10
5.c.	INSTALLING CEILING MOUNT ON CONCRETE CEILINGS	11
5.d.	CONSTRUCTIONAL REQUIREMENTS FOR THE CEILING ON CONCRETE CEILING	12
5.e.	CONTROL AND POWER SUPPLY OF THE SYSTEM	13
6.	PRODUCT DESCRIPTION (WALL MOUNT)	14
7.	INSTALLATION REFERENCES (WALL MOUNT)	15-22
8.	INSTALLATION PREPARATION (WALL MOUNT)	23-30
9.	WARNING AND CAUTIONS	31-32
10.	EXPLANATION OF SYMBOLS	33
11.	STANDARDS AND DIRECTIVES	34
12.	CONDITION OF INSTRUMENT AT TIME OF UNPACKING/SUPPLY	35
13.	INSTALLATION OF BASE (MOBILE STAND)	36-37
14.	MICROSCOPE INSTALLATION	38
15.	ELECTRICAL CONNECTIONS	39-40
16.	CONTROL ELEMENTS	41-42
17.	INSTRUCTIONS FOR USING THE MICROSCOPE	43-44
18.	SYSTEM CONFIGURATION DIAGRAM	45
19.	THERMAL CUTT-OFF	46
20.	TENSION ADJUSTMENT	46
21.	MOVING POSITION OF THE SYSTEM	47
22.	CARE AND MAINTENANCE	48-49
23.	CLEANING AND DISINFECTION	50
24.	AMBIENT REQUIREMENT	51
25.	DISPOSAL	51
26.	TROUBLESHOOTING TABLE	52
27.	TECHNICAL SPECIFICATIONS	53
28.	GUIDANCE TABLES	54-57
29.	GLOSSARY	58
30.	WARRANTY	59-60

1. INTRODUCTION AND INTENDED USE

The LABOMED Prima is a surgical and diagnostic microscope which is adaptable for different surgical needs for consistent visualization during all intra operative phases of dental surgeries by providing magnified view of the surgical field without compromise to performance.
The microscope provides extremely high optical image quality, good depth of focus and wide field of view for precise surgery. Illumination control, EM controlled positioning of magnichanger, adjustment of the observation head, helps to reduce the Surgeon's work fatigue and allow comfortable use over long period.

Salient features of this Microscope are:

1. **The observation head can easily be positioned with the help of a suspension arm.**
2. **An advanced 6-step magnification changer allows an optimal magnification for a particular surgery at different magnifications.**
3. **Cold light illumination with a high intensity 50 W LED lamp is provided in magnichanger for proper illumination. The illumination is further adjustable up to its most suitable brightness using intensity control knob ergonomically located in the front of magnichanger.**
4. **An effortless articulation system ABA (Automatic Balancing Arm) features an electromagnetic brake system that enables the ultimate flexibility in manoeuvring the microscope's viewing angle and position.**
5. **The Labomed NuVar CMO with variable working distance comes as standard and provide greater convenience to user in achieving a comfortable working distance.**
6. **Dual iris Diaphragm allows greater depth of field particularly valuable for photography.**
7. **Rigid Star type base with 3 lockable castor wheels provides greater stability as well as mobility to the instrument.**

☞ **Any serious incident associated with this device should be reported to Labo America, Inc. USA and to your national health agency.**

INTENDED USE:

PRIMA pro Surgical Microscope is an AC powered device intended for use during diagnosis and Surgery to provide a magnified view of surgical field. .

NOTE: The use of Prima Microscope is purely for intended use.

CONFIGURATIONS

Microscope	Catalogue No.
PRIMA pro (Floor Stand)	6183601
PRIMA pro (Wall Mount)	6183602
PRIMA pro (Ceiling Mount)	6183603

2. PRODUCT DESCRIPTION (FLOOR MOUNT)

Catalogue No. 6183601
Model: PRIMA pro

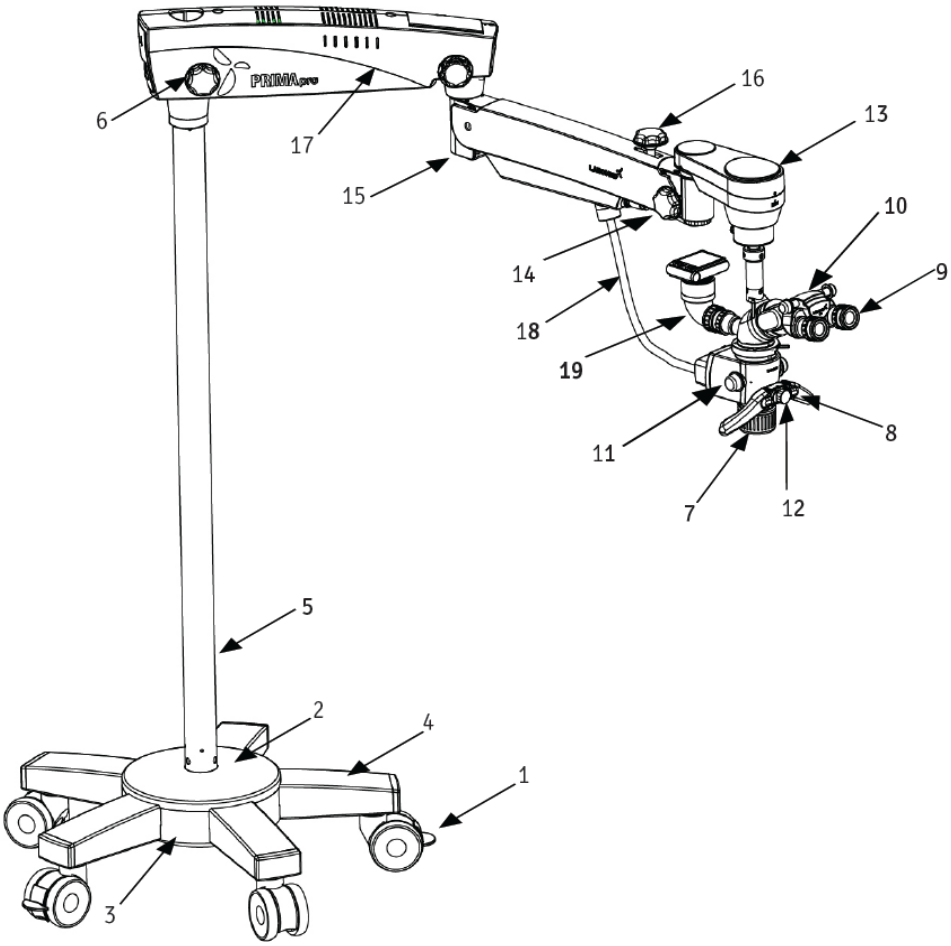

Fig. 1

1. **Castor Wheels With Brakes**
2. **Star Base Top**
3. **Star Base Bottom**
4. **Star Base Leg**
5. **Column**
6. **Swivel Arm Locking Knob**
7. **Common Main Objective with Fine Focusing**
8. **Both Hand Release (Electromagnetic Clutch)**
9. **Eyepieces**
10. **Ergo Head 0°-210° Tiltable**
11. **Step Magnification Knob**
12. **Illumination Control Knob**
13. **ABA (Auto Balancing Arm) Electromagnetic Clutch**
14. **Auto Balancing Arm Locking Knob**
15. **Suspension Arm Spring Tension Adjustment**
16. **Suspension Arm Movement Locking Knob**
17. **Swivel Arm**
18. **Wire Mesh with Fibre Light Guide Inside**
19. **Rear View Camera Adapter**

3. PRODUCT DESCRIPTION (CEILING MOUNT)

Catalogue No. 6183603
Model: PRIMA pro

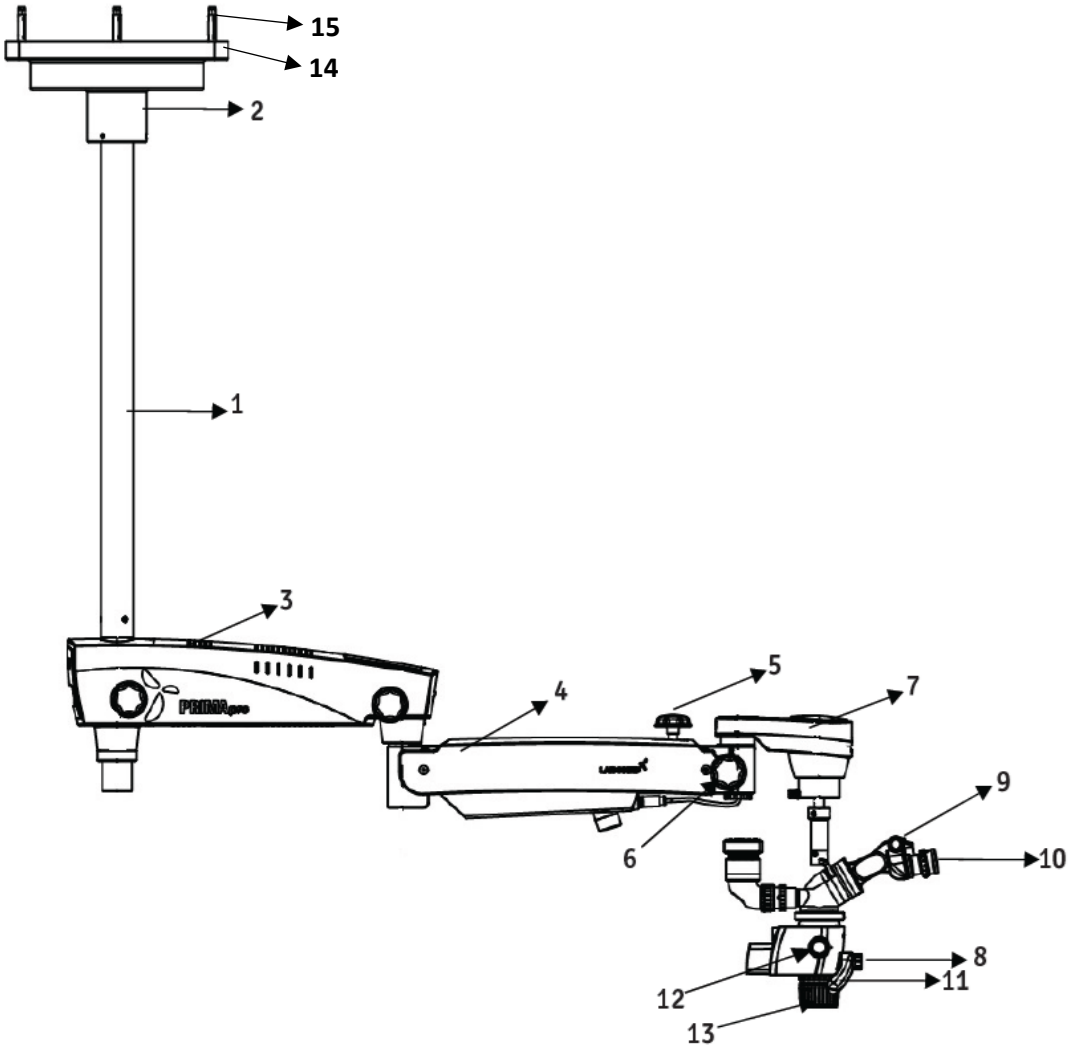

Fig. 2

1. **Column**
2. **Cover Mount (to be used in false ceiling only)**
3. **Swivel Arm**
4. **Suspension Arm**
5. **Suspension Arm Hydraulic Movement Lock Knob**
6. **Auto Balancing Arm Lock Knob**
7. **ABA (Auto Balancing Arm) Electromagnetic Clutch**
8. **Illumination Control Knob**
9. **Ergo Head 0°-210° Tiltable**
10. **Eyepieces**
11. **Both Hand Release Electromagnetic Clutch**
12. **Step Magnification Knob**
13. **Common Main Objective With Fine Focusing**
14. **Master Ceiling Plate**
15. **Anchoring Bolts**

4. INSTALLATION REFERENCES (CEILING MOUNT)

CEILING MOUNT (STANDARD ARM)

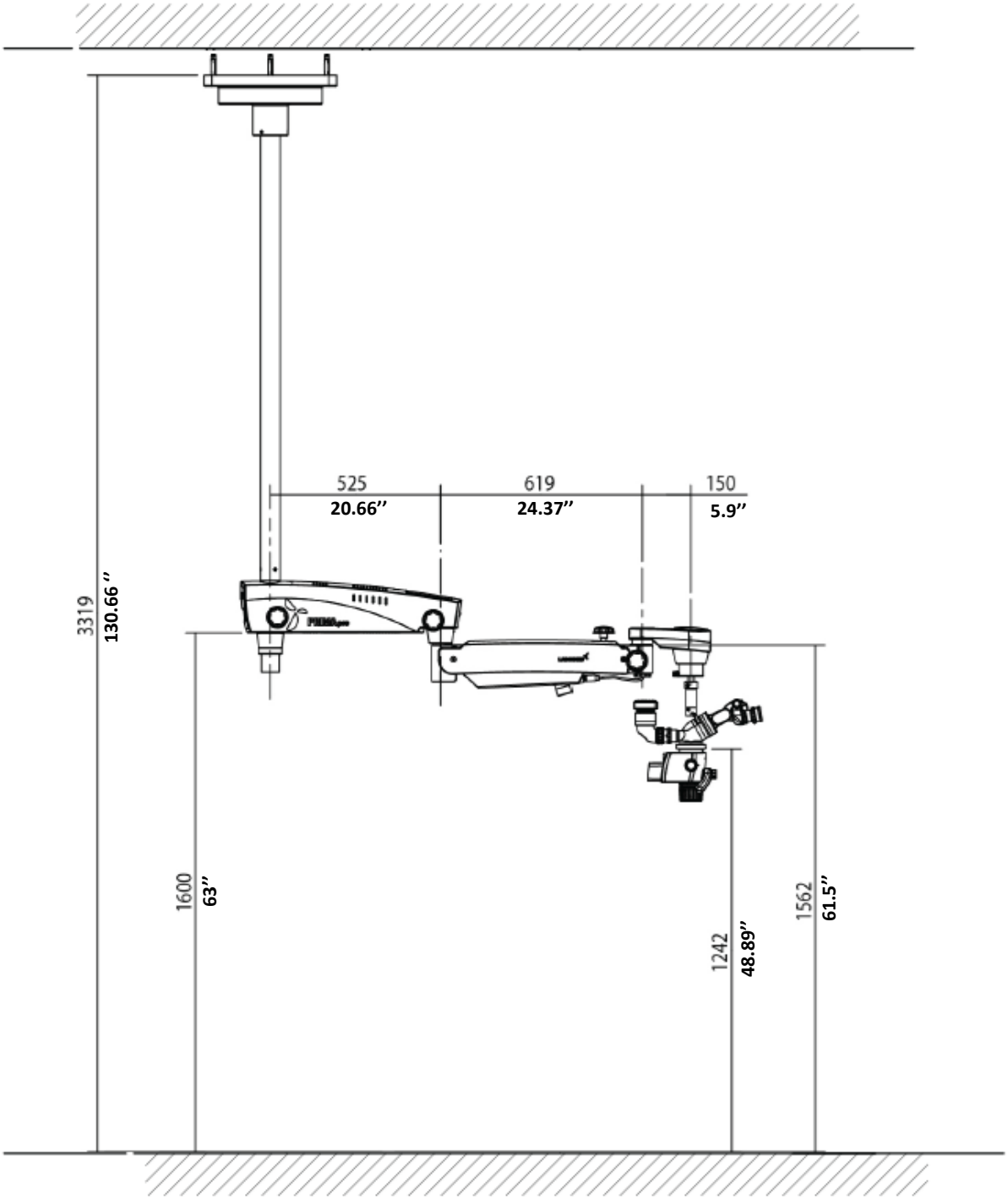

Fig. 3

REQUIED COLUMN LENGTH FORMULA = (CEILING HEIGHT - 1760mm)

REFER EXAMPLE: - COLUMN LENGTH = 3319mm - 1760mm = 1559mm(61.37 inches)

INSTALLATION REFERENCES (CEILING MOUNT) continued

CEILING MOUNT SYSTEM FOR 10 FEET CEILING HEIGHT

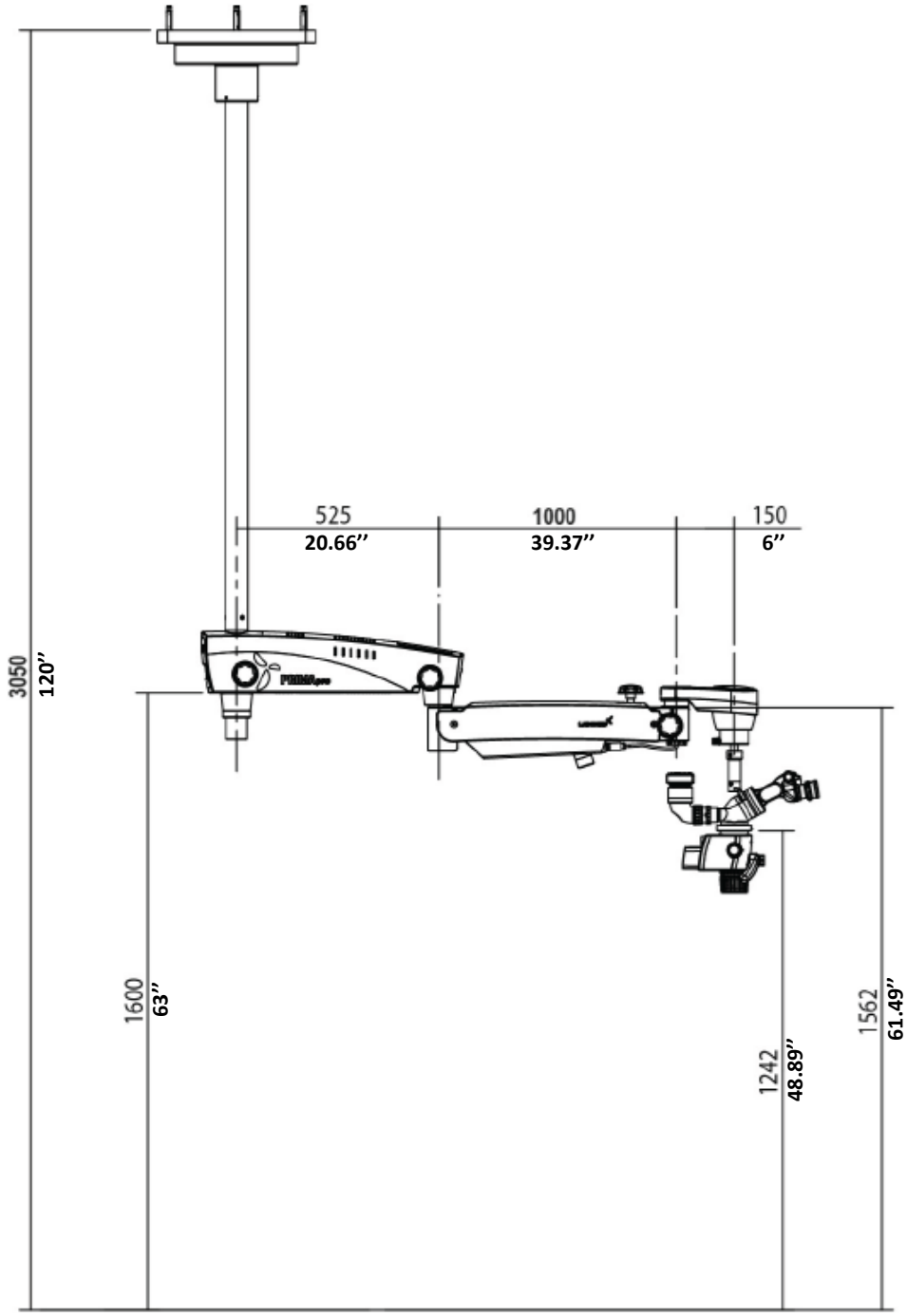

Fig. 4

INSTALLATION REFERENCES (CEILING MOUNT) continued

MARKING REFERENCE

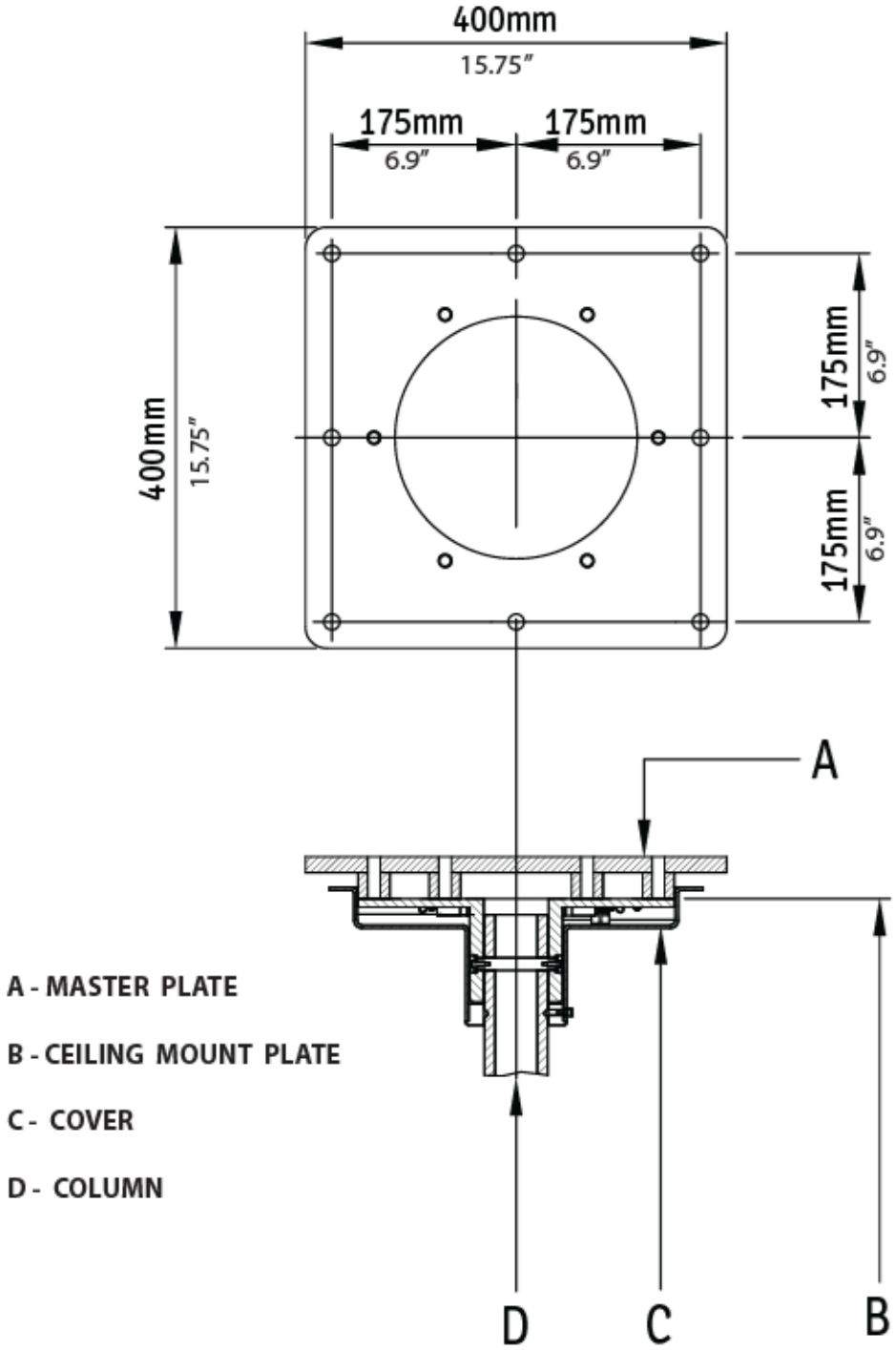

Fig. 5

INSTALLATION REFERENCES (CEILING MOUNT) continued

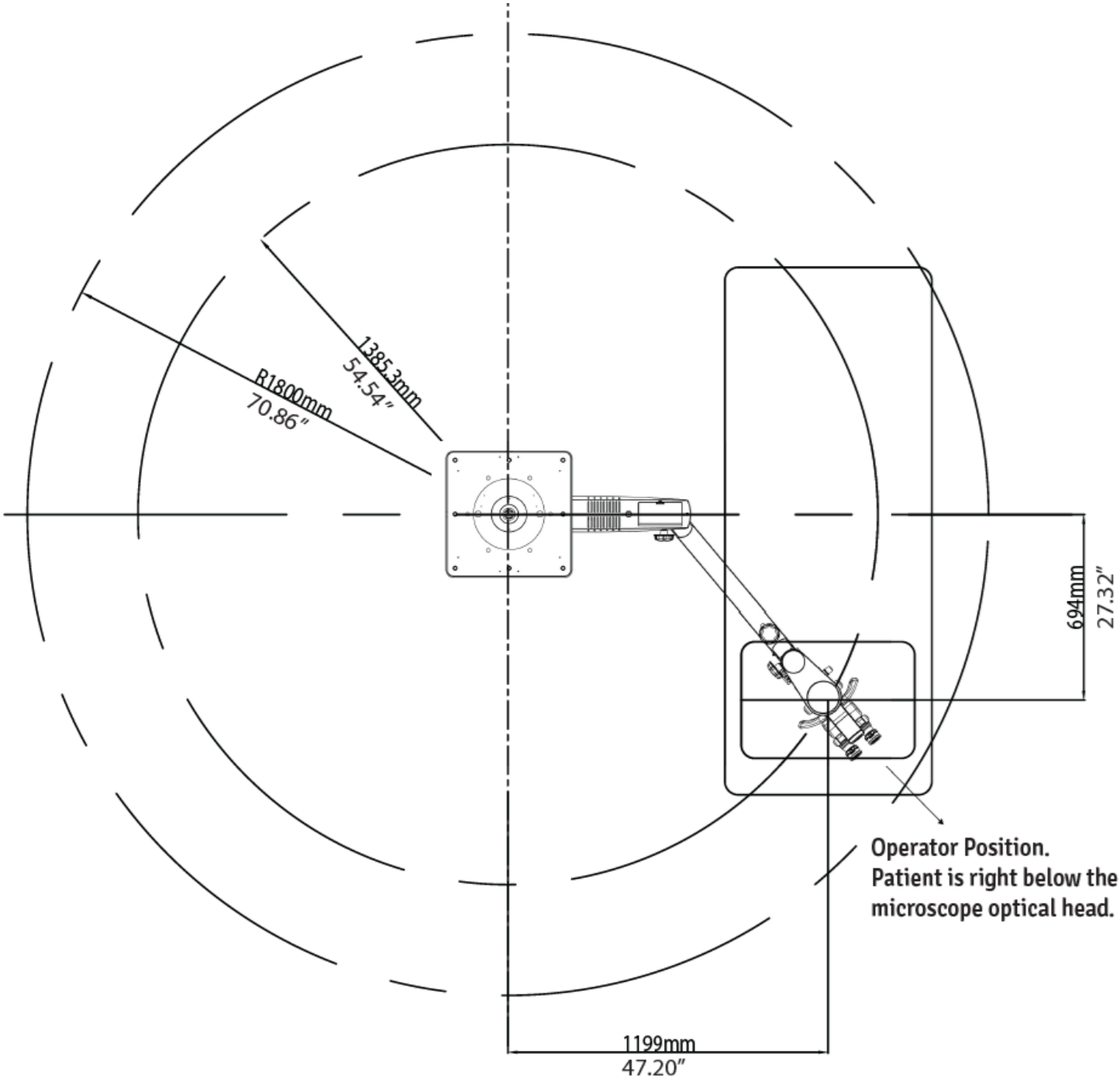

Fig. 6

INSTALLATION REFERENCES (CONCRETE CEILING MOUNT) continued

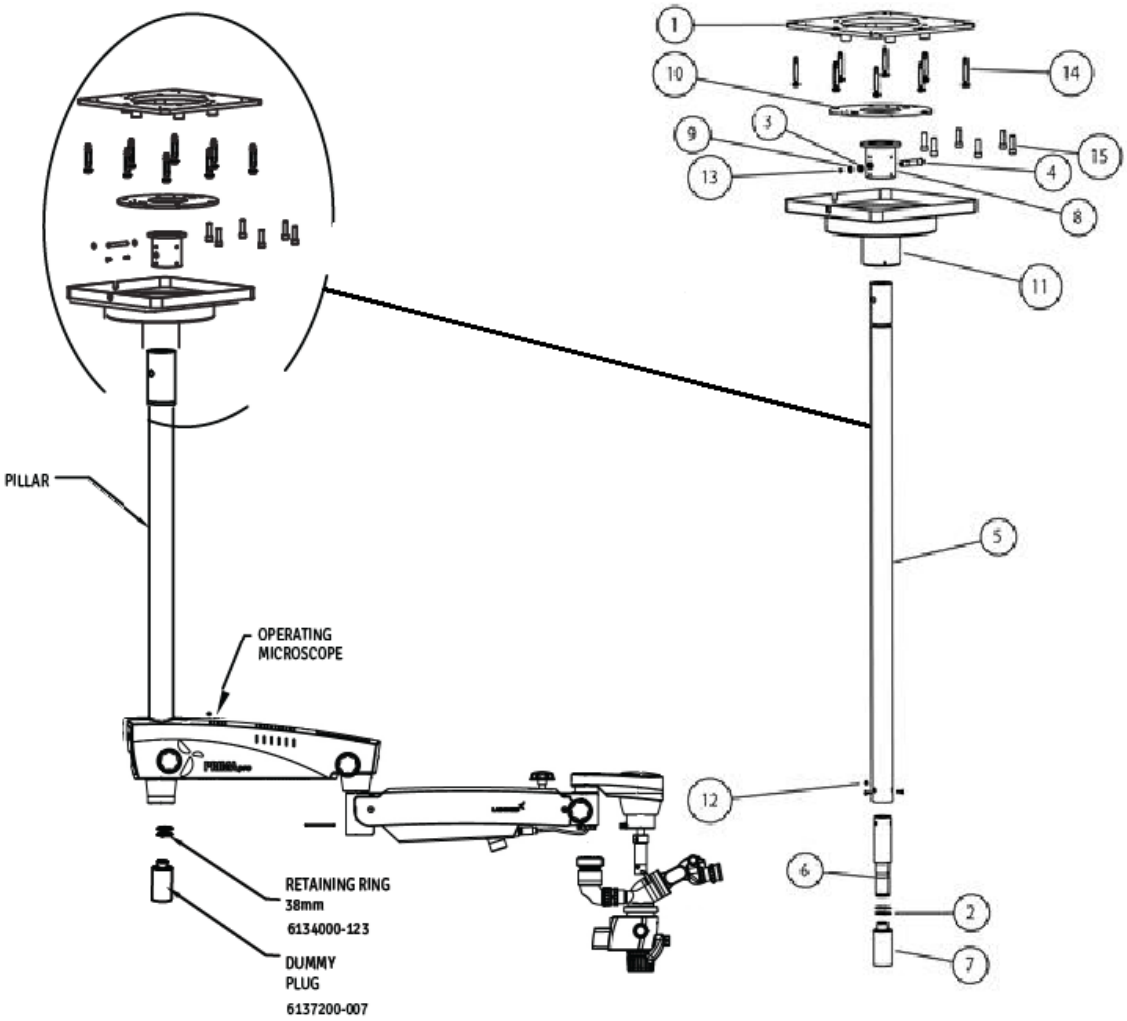

Fig. 7

ITEM	QTY	PART NUMBER	DESCRIPTION
1	1	6129004-801	MASTER PLATE
2	2	6134000-123	RETAINING RING DIA 38
3	1	6136000-147	CHECK NUT
4	1	6137200-003	PIN
5	1	6137200-004	PILLAR
6	1	6137200-005	FRONT SHAFT
7	1	6137200-007	DUMMY PLUG
8	1	6137200-012	FLANGE BUSH
9	1	6137200-013	WASHER
10	1	6137200-804	ASSLY CEILING MOUNT PLATE
11	1	6137200-805	ASSLY CEILING COVER PRIMA
12	3	SS-800	SOCKET FLAT HEAD SCREW M6x16
13	1	SS-802	M5x10 CSK HEAD SCREW
14	8	SS-854	RAVAL PLUG M10
15	6	SS-921	M12x 40-SOCKET HEAD CAP SCREW

5. CEILING MOUNT INSTALLATION

5.a. DROP CEILING APPLICATIONS

Many newer constructions use drop ceilings. Whenever this type of application is used, all supporting structure and electrical service (115/230 VAC, 15A) is the customer's responsibility and must be completed before the installation.

WARNING: THE SUPPORTING STRUCTURE FOR THE CEILING MOUNT AND WALL MOUNT INSTALLATION MUST BE CAPABLE OF SUPPORTING A MINIMUM WEIGHT OF 220 LBS (100 kg) AND BE STABLE LATERALLY AND VERTICALLY FREE FROM VIBRATION.

WARNING:

- **CEILING MOUNT, COLUMN ASSEMBLY AND MICROSCOPE TOGETHER CAN WEIGHTS APPROXIMATELY UPTO 60 KG.**
- **TO AVOID PERSONAL INJURY TWO (2) PEOPLE ARE REQUIRED FOR PROPER INSTALLATION.**

PROCEDURE:

1. **Ensure that there is a 350mm diameter hole in the drop ceiling to mount the master Ceiling plate.**
2. **Labomed Ceiling Mount system for wooden ceiling can be installed by fixing a flat wooden membrane at least 90mm thick to the joist and then mount the Master Ceiling Plate to the wooden membrane as shown in Fig. 8.**
3. **Using the Paper template provided, mark the positions of the Eight (8) mounting holes on wooden membrane referring figure.**
4. **Drill Eight (8) 1/4" (6mm) pilot holes either direct into Joist or the additional wooden membrane as per the roof available.**
5. **Place a 10mm flat washer over each of the Eight M10 X 100mm hex head lag screws.**
6. **Referring Flat side of Master Plate, line up the (6) holes with the pilot holes in the mounting surface Zand insert the hex head lag screws into the holes.**
7. **Tighten the master Plate with a 17mm Hex Socket Spanner.**
8. **Position and align the ceiling Mount against the master plate and insert 6 socket head bolts M12 X 40.**
9. **Slightly Tighten all the bolts using Allen key 10mm.**
10. **Use a level to ensure the column assembly is Levelled vertically. Refer Section "Levelling the ceiling Mount system" to correct any levelling concerns.**
11. **After levelling the column. Tighten all 6 bolts to the full torque.**
12. **Completing of all the procedure from 1 to 11 above is the responsibility of the customer. Labomed representative will complete rest of the microscope Installation after this.**
13. **Power up the system with the cable provided. Make sure AC outlet is hospital grade & grounded properly.**
14. **Put the drop ceiling tile back into place.**

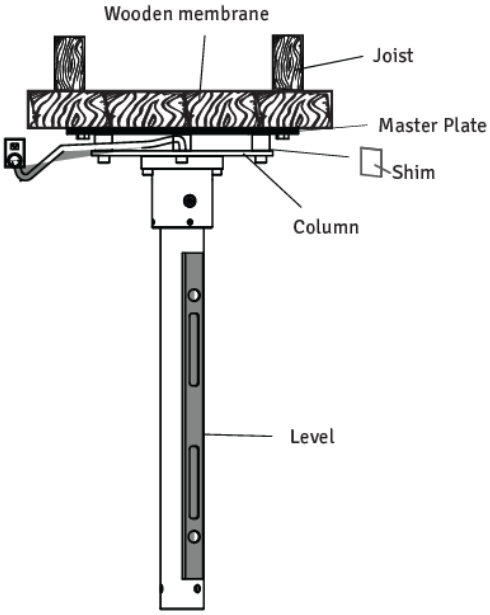

Normal Ceiling Mount
Fig. 8

CEILING MOUNT INSTALLATION (continued)

5.b. LEVELLING THE CEILING MOUNT SYSTEM

It is important to ensure the column for the ceiling mount is Plumb after installation. The column must be perfectly vertical to prevent the microscope system from drifting from side to side. Use following procedure:

1. **Use the 10mm Allen key to slightly loosen all of the (6) M10 bolts.**
2. **Place a level across the bottom of ceiling mount as shown in Figure and to check the Vertical levelling. Use Shims as required and adjust the RAWL Bolts/ Lag bolts until the column is Vertical.**
3. **Tighten all screws securely.**

NOTICE: Shims and Shim materials are to be provided by the customer and are not furnished by Labomed. There are numerous shims and shim materials commercially available and no specific type or brand name is required.

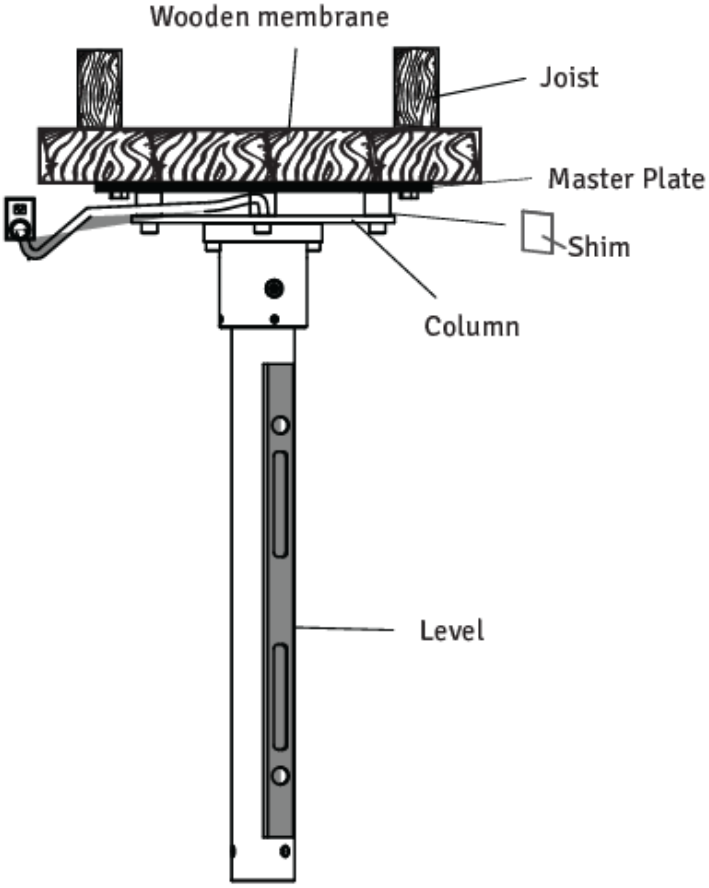

Normal Ceiling Mount
Fig. 9

CEILING MOUNT INSTALLATION (continued)

5.c. INSTALLING CEILING MOUNT ON CONCRETE CEILING

Fixing of Master Plate:

1. **Use the Paper template provided to mark the position for the anchors of Master Plate.**
2. **Drill the Eight (8) mounting holes 14mm diameter and 100mm deep.**
3. **Place a 10mm flat washer and a split washer over each of the Eight M10 X 75 hex head RAWL Plug.**
4. **Referring flat surface of Master Plate, align 8 holes with the pilot holes in the ceiling.**
5. **Insert the hex head RAWL screws into the holes and fully tighten the Master Plate with a 17mm hex socket spanner.**

Installation of Ceiling Mount:

6. **Position the ceiling Mount against the master plate and insert 6 socket head bolts M12 X 40 after aligning the 6 mounting holes.**
7. **Slightly tighten all the bolts using Allen key 10 mm.**
8. **Use a level to ensure the column assembly is Levelled vertically. Refer Section "Levelling the ceiling Mount system" to correct any levelling concerns.**
9. **Fully tighten all the bolts with 10mm allen key.**
10. **All the procedure from Part 1 to 9 above is the responsibility of the customer to organise. Labomed representative will complete rest of the microscope Installation after this.**
11. **Power up the system with the cable provided. Make sure AC outlet is hospital grade & grounded properly.**
12. **Put the drop ceiling tile back into place.**

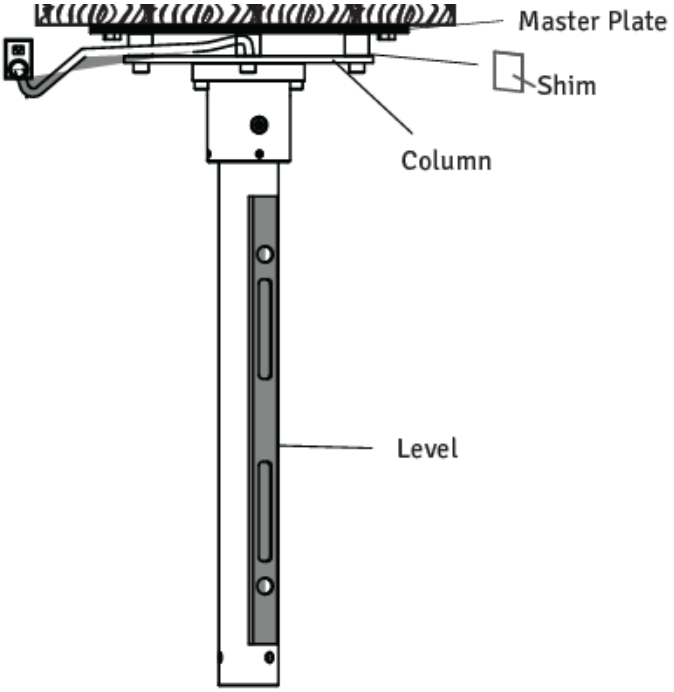

Normal Ceiling Mount
Fig. 10

CEILING MOUNT INSTALLATION (continued)

5d. Constructional requirements for the ceiling mount installation on concrete ceiling

1. **The ceiling mount must be installed as recommended in this manual.**
2. **The construction specialist responsible must confirm in writing that the applicable regional and local bodies & regulations have been complied and the points listed below are taken care. The customer must keep this confirmation with his records. A copy of this document must be provided to labomed representative dealer.**
3. **The roof on which ceiling mount is to be mounted must have the following load capacity:**
   Perpendicular force: minimum 1500 Nm.
   Torque: Perpendicular to the Ceiling 1500 Nm minimum.
   Also take into account any additional loads acting on the Ceiling and any other loads anchored in the Ceiling.
4. **The Master Plate should be installed at the time of Construction.**
5. **Minimum edge distance required on all sides is 16”.**
6. **The ceiling plate must be aligned in a parallel position (max. deviation ±1˚).**

Note:

1. **If an existing ceiling mount is ever exchanged, never re-use the old anchors. New anchor holes must be drilled. When calculating the effective strength of the new anchors, make sure to take into account the weakening effect of the old holes in the ceiling.**
2. **On the basis of the above aspects, the person responsible for the building must decide on and take responsibility for the most suitable method of anchoring.**

CEILING MOUNT INSTALLATION (continued)

5e CONTROL AND POWER SUPPLY OF THE SYSTEM

NOTE:
The maximum weight of the surgical microscope including accessories must not exceed 60 kg and the respective weight of our accessory equipment is specified in the price list.

The weight of the mount including the surgical microscope is as follow:

Ceiling mount kit	:	18 kg
Column	:	8 Kg
Surgical microscope	:	22 kg
Total	:	48 kg

Power Line	:	3/1.5mm 2
Fuse	:	4.0 Amp
Power Consumption	:	Max. 200W

NOTE:
A socket with properly installed protective earth connection must be provided at the installation site on Ceiling flange. The terminals for power connection are allocated on Ceiling Mount.

Potential equalization: Take the necessary actions in the building to include the instrument in the protective measure of "potential equalization".

NOTE:
The series 6183000 suspension systems including the components mentioned here comply safety requirement with CE, EU MDR 2017/745 and IEC 60601-1-3.2.

Such activities as the installation of the flange and the installation of conduits and electrical lines are the customer's responsibilities.

List of Contents: Ceiling Kit

1.	Raval Plugs	:	06 Nos
2.	Washers	:	06 Nos
3.	Ceiling Mount	:	01 Nos
4.	Column	:	01 Nos
5.	Ceiling Mount Cover	:	01 Nos

6. PRODUCT DESCRIPTION (WALL MOUNT)

Catalogue No. 6183602
Model: PRIMA pro

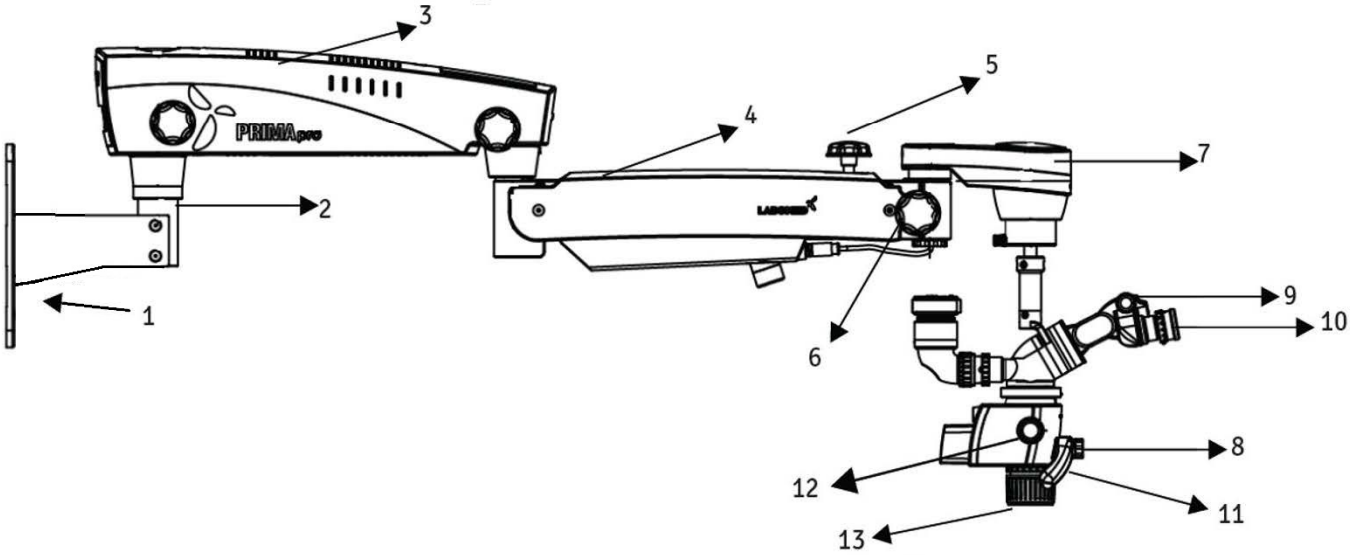

Fig. 11

1. **Wall Mount Bracket**
2. **Mount Shaft**
3. **Swivel Arm**
4. **Suspension Arm**
5. **Suspension Arm Hydraulic Movement Lock Knob**
6. **Auto Balancing Arm Lock Knob**
7. **ABA (Auto Balancing Arm) Electromagnetic Clutch**
8. **Illumination Control Knob**
9. **Ergo Head 0°-210° Tiltable**
10. **Eyepieces**
11. **Both Hands Release (Electromagnetic Clutch)**
12. **Step magnification knob**
13. **Common Main Objective With Fine Focusing Ring**

7. INSTALLATION REFERENCES (WALL MOUNT)

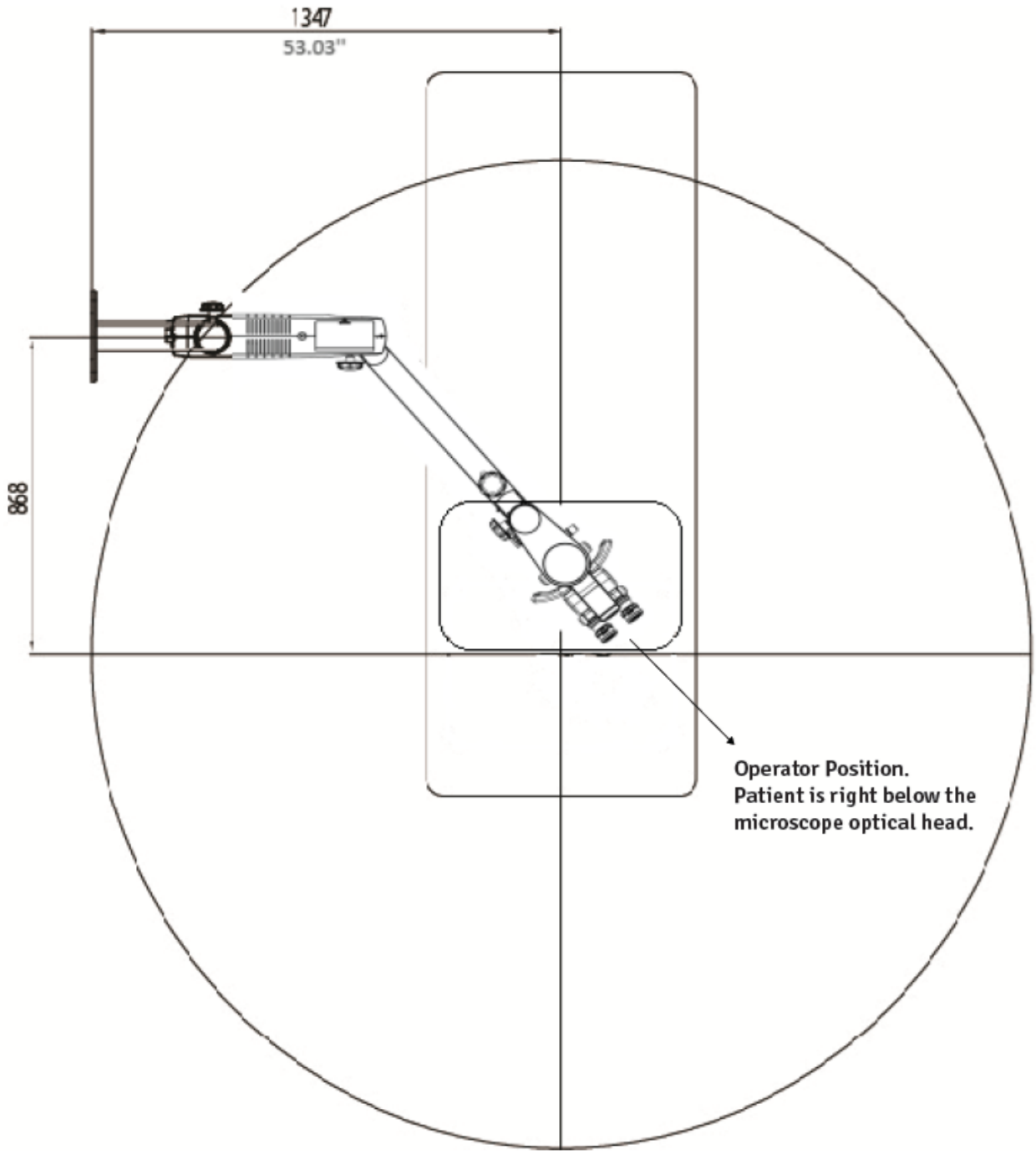

Fig.12

INSTALLATION REFERENCES (WALL MOUNT) continued

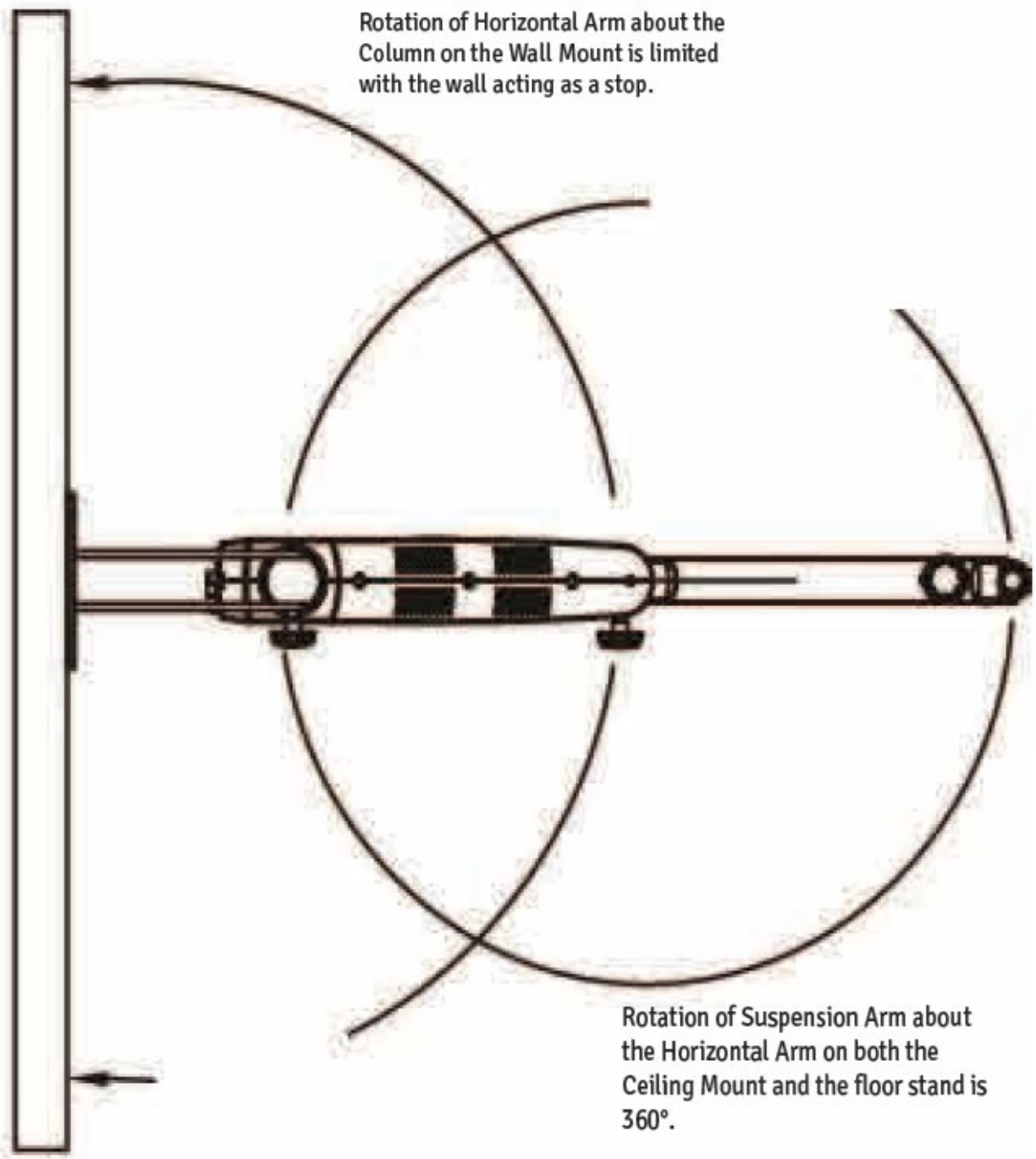

Fig. 13

INSTALLATION REFERENCES (WALL MOUNT) continued

PRIMA pro Wall Mount Horizontal with Standard Suspension Arm

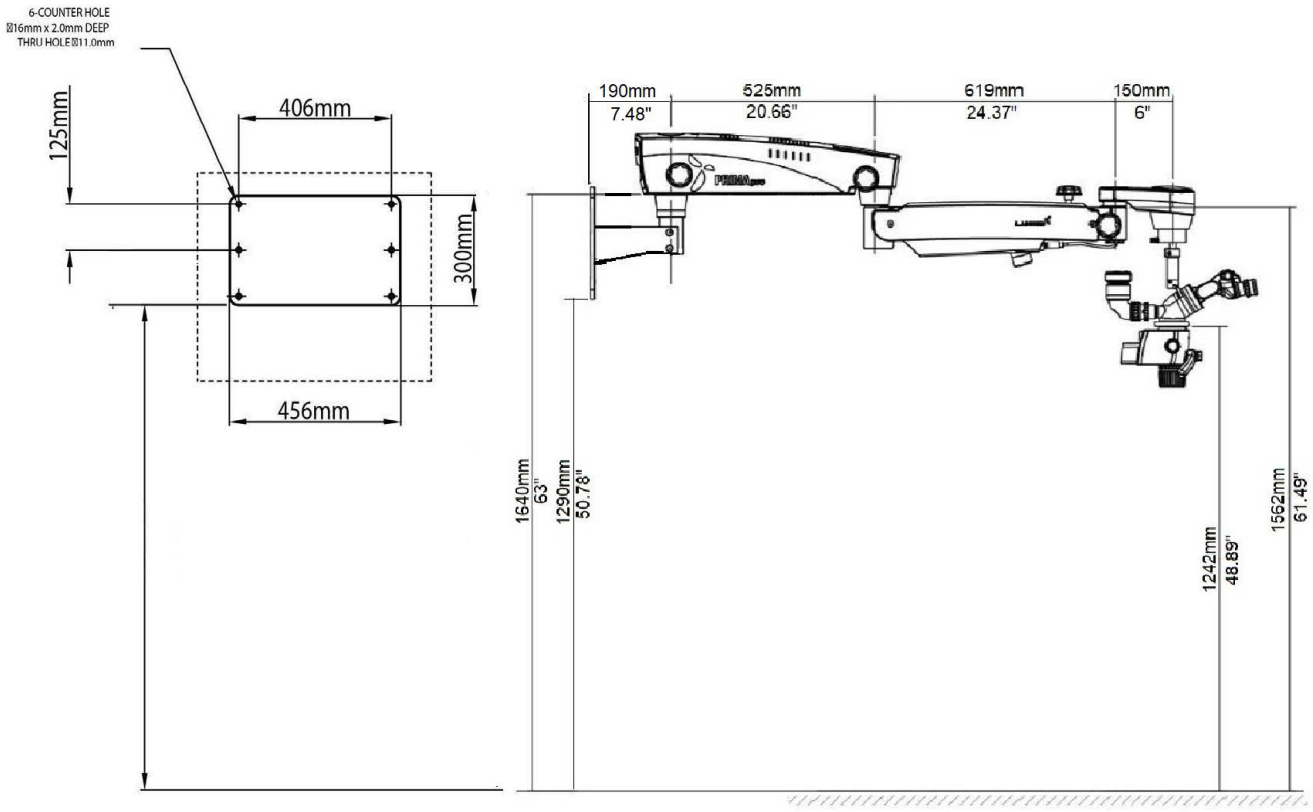

PRIMA pro Wall Mount Horizontal with Standard Suspension Arm and Extensions

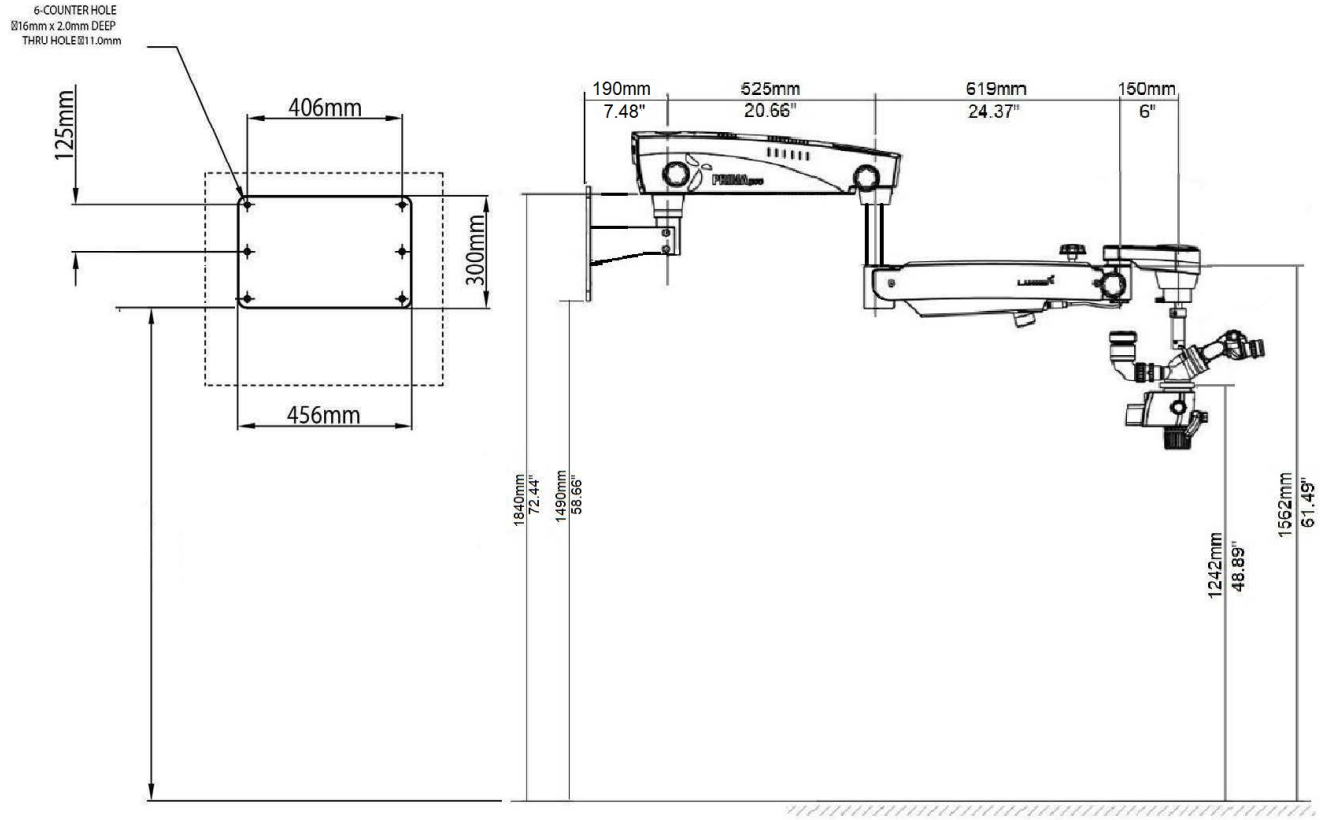

Fig. 14

INSTALLATION REFERENCES (WALL MOUNT) continued

PRIMA pro Wall Mount Verticalwith Standard Suspension Arm

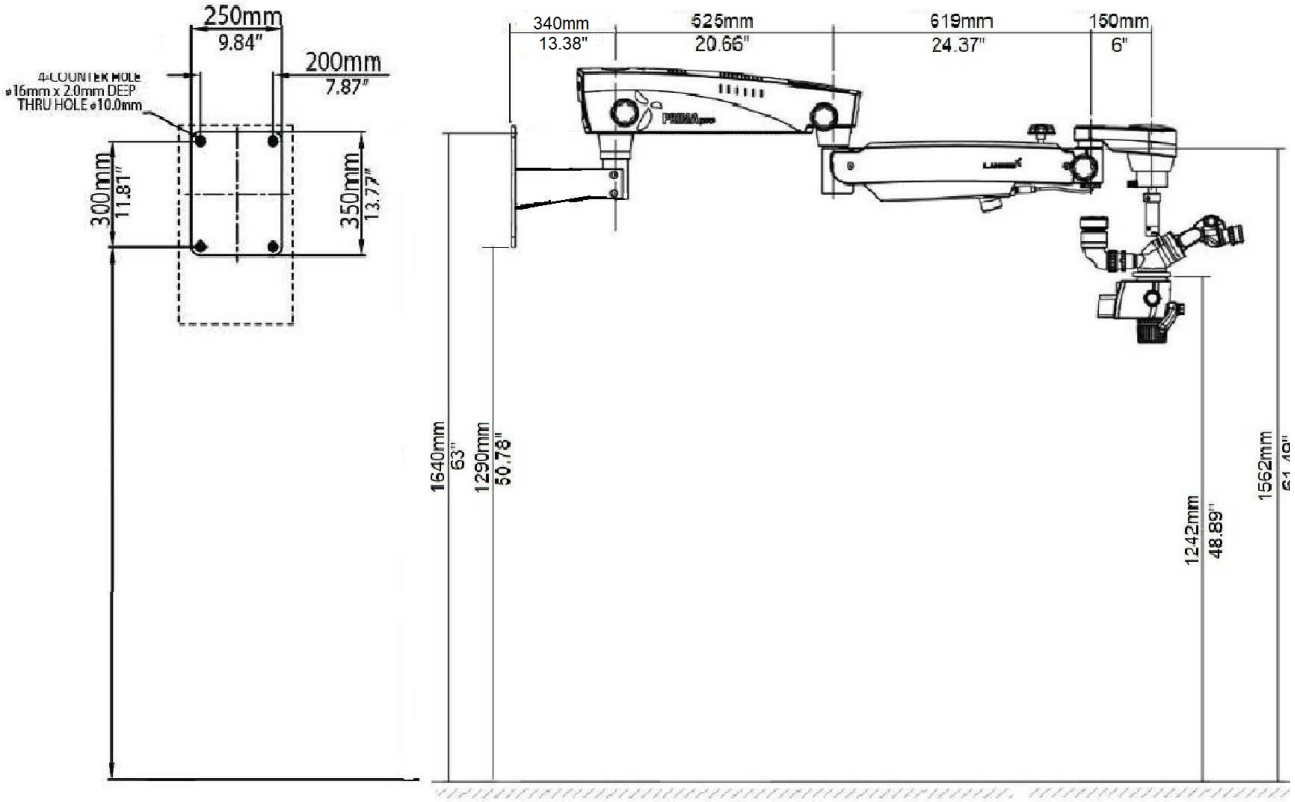

PRIMA pro Wall Mount Verticalwith Standard Suspension Arm and Extensions

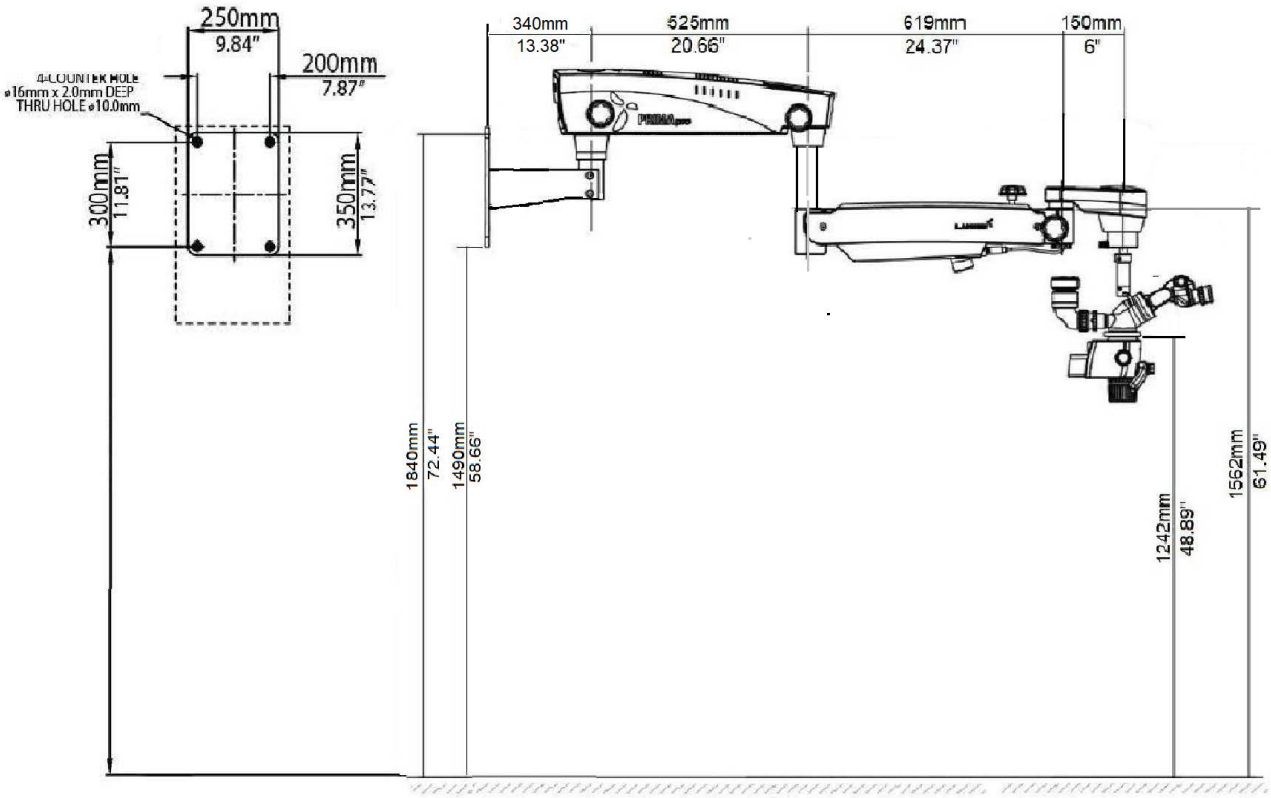

Fig. 14a

INSTALLATION REFERENCES (WALL MOUNT HORIZONTAL)

7a. Horizontal Wall Mount: MARKING REFERENCE

Anchoring the Wall Mount

Reference

A. Paper Template for Marking
B. Wall Mount Assembly
C. Distance from Floor – Refer suitable height as per ordered configuration from Figure – 14.

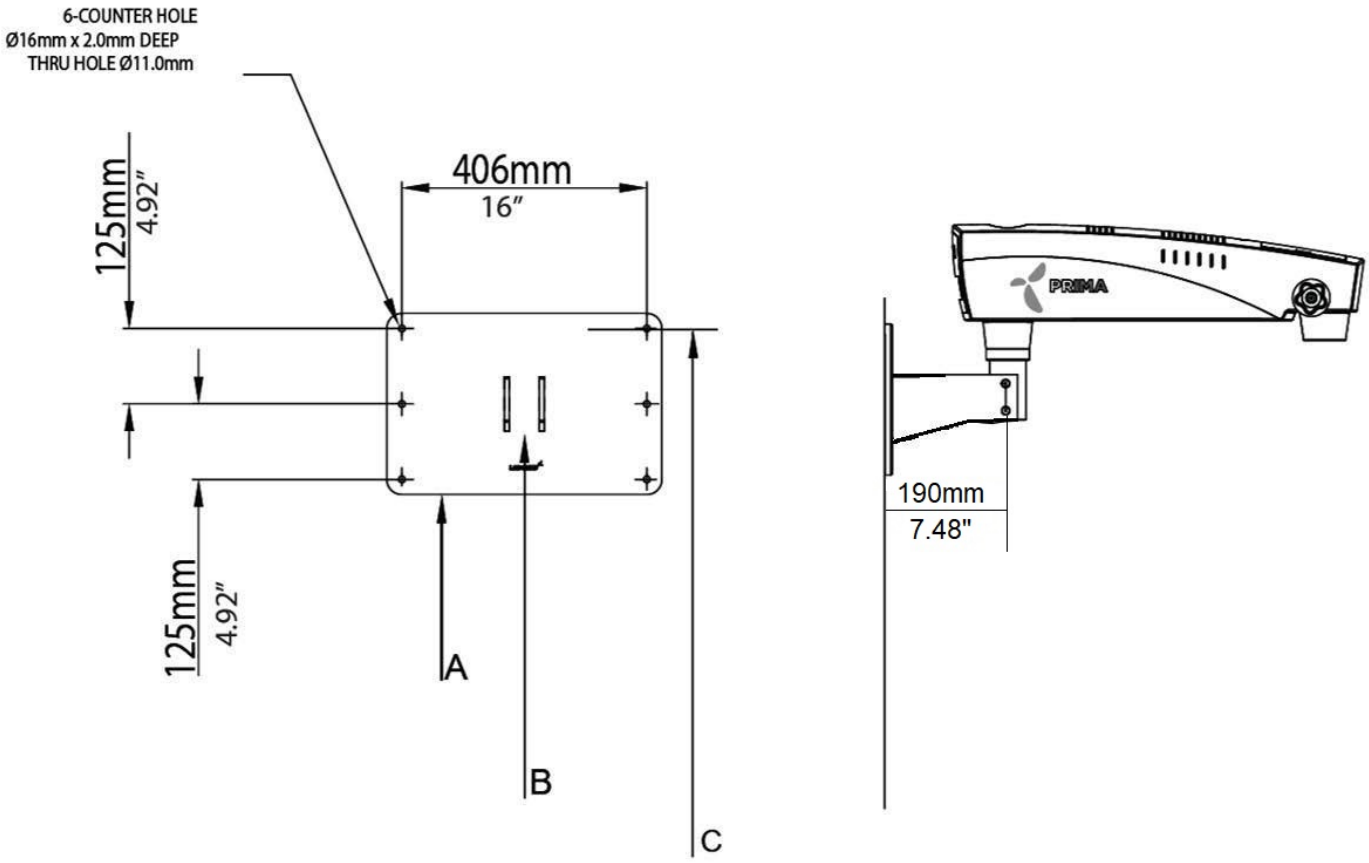

Fig. 15

INSTALLATION REFERENCES (WALL MOUNT VERTICAL)

7b. Vertical Wall Mount: MARKING REFERENCE

Anchoring the Wall Mount

Reference

A. Paper Template for Marking
B. Wall Mount Assembly
C. Distance from Floor – Refer suitable height as per ordered configuration from Figure –14.

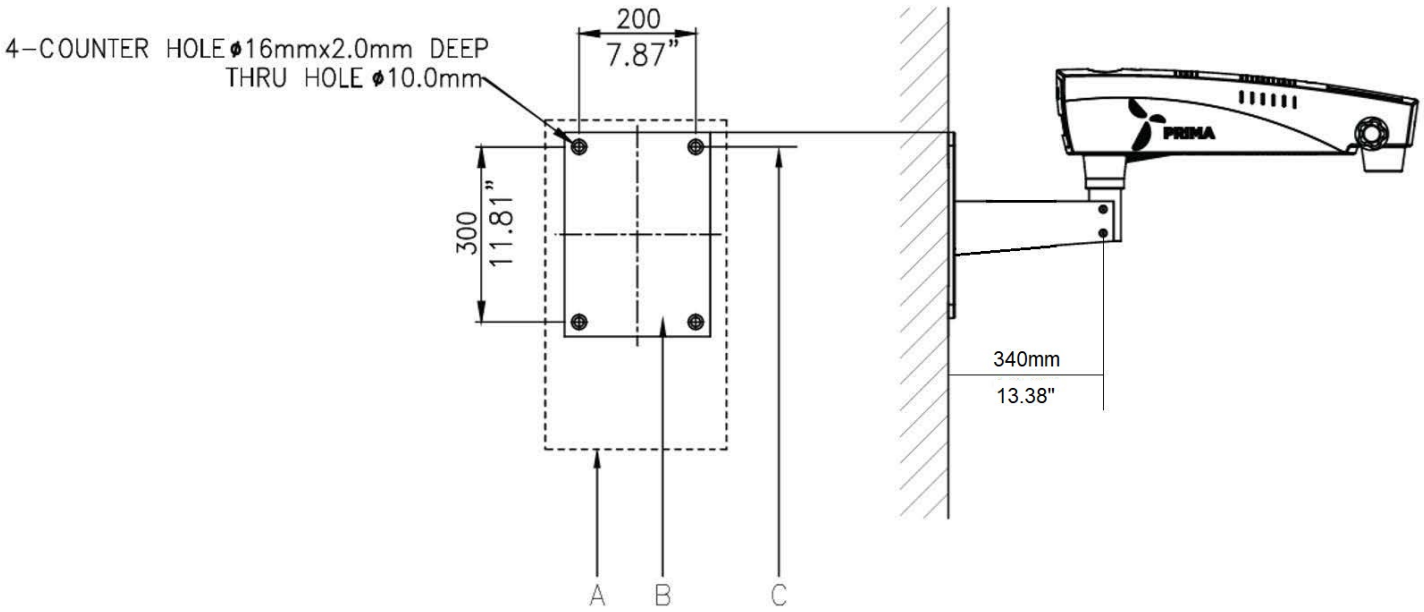

Fig. 15a

INSTALLATION REFERENCES (WALL MOUNT)

Wall Mount: Alternative Installation to the Patient's Side (with Standard Suspension Arm)

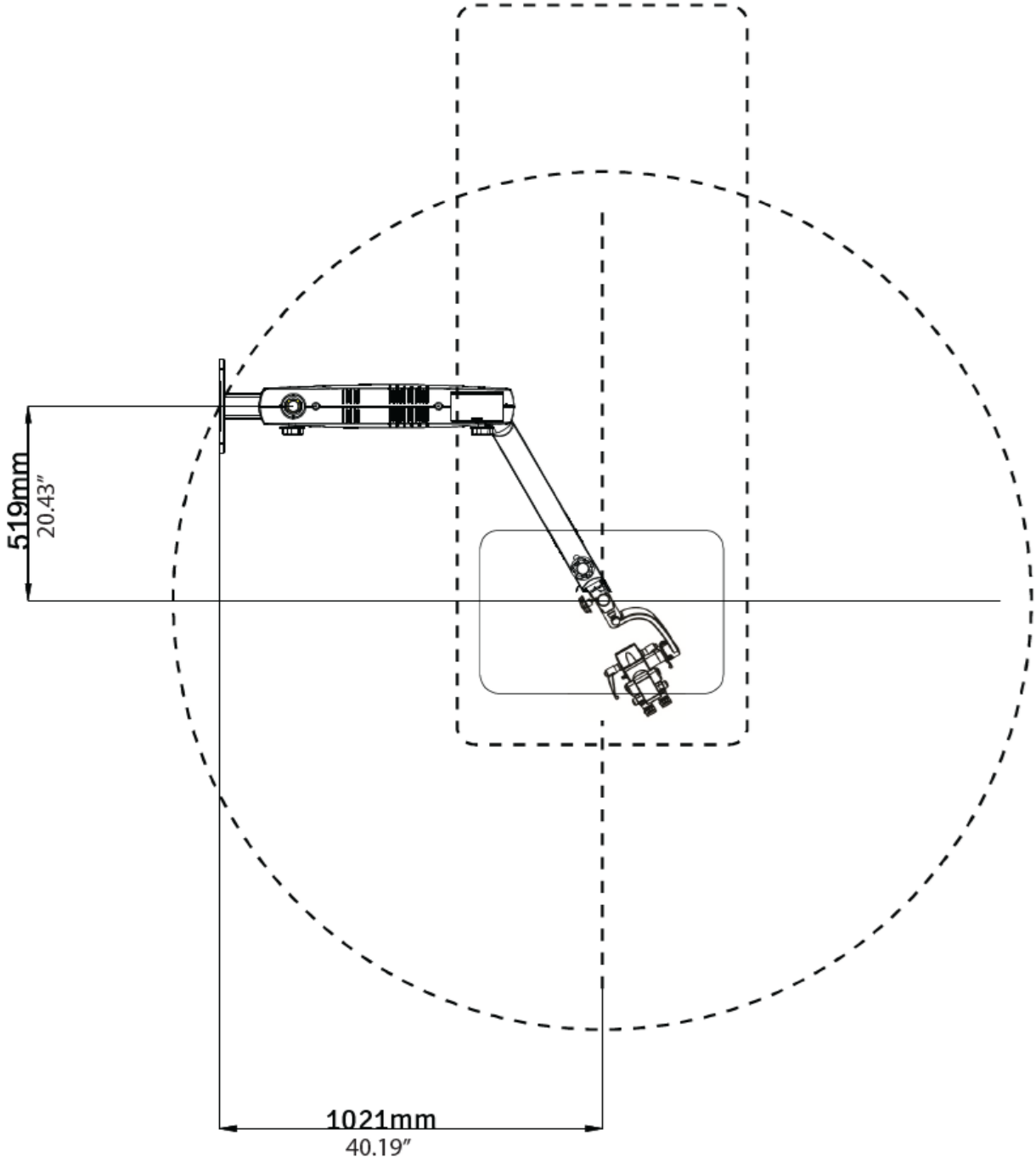

Fig. 16

HORIZONTAL WALL MOUNT INSTALLATION REFERENCES (WOODEN WALL)

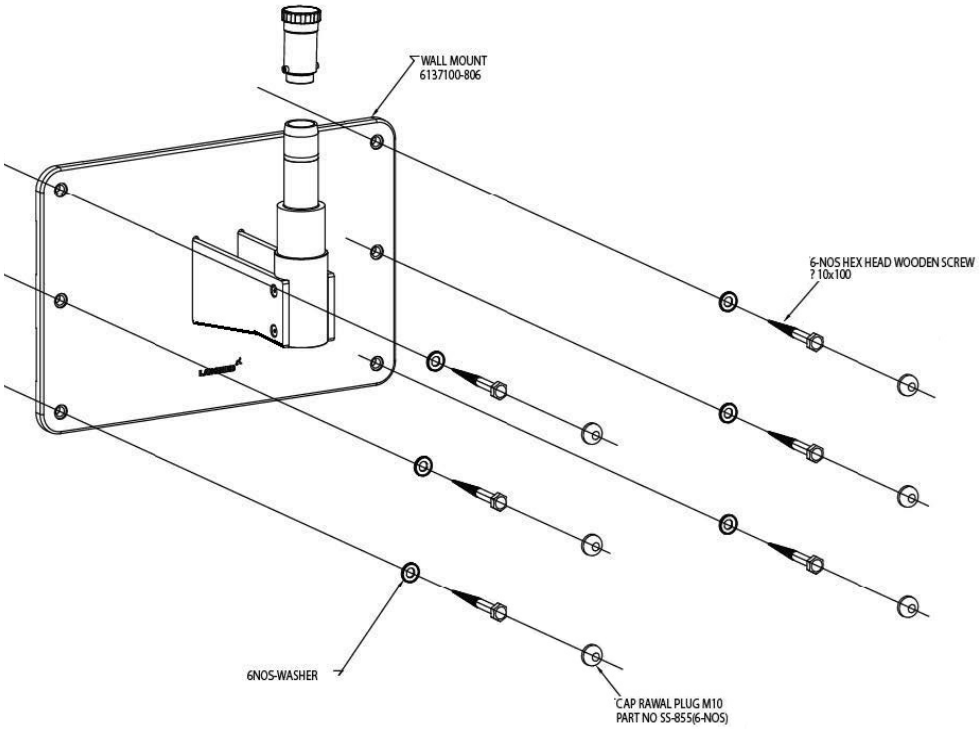

VERTICAL WALL MOUNT INSTALLATION REFERENCES (WOODEN WALL)

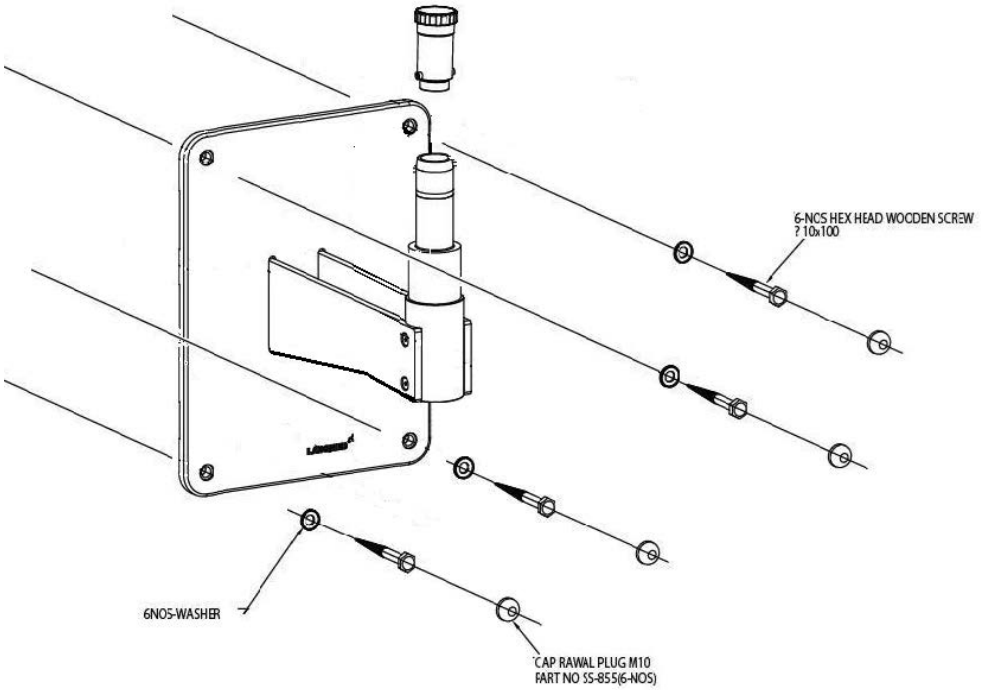

Fig. 17

HORIZONTAL WALL MOUNT INSTALLATION REFERENCES (SOLID BRICK WALL)

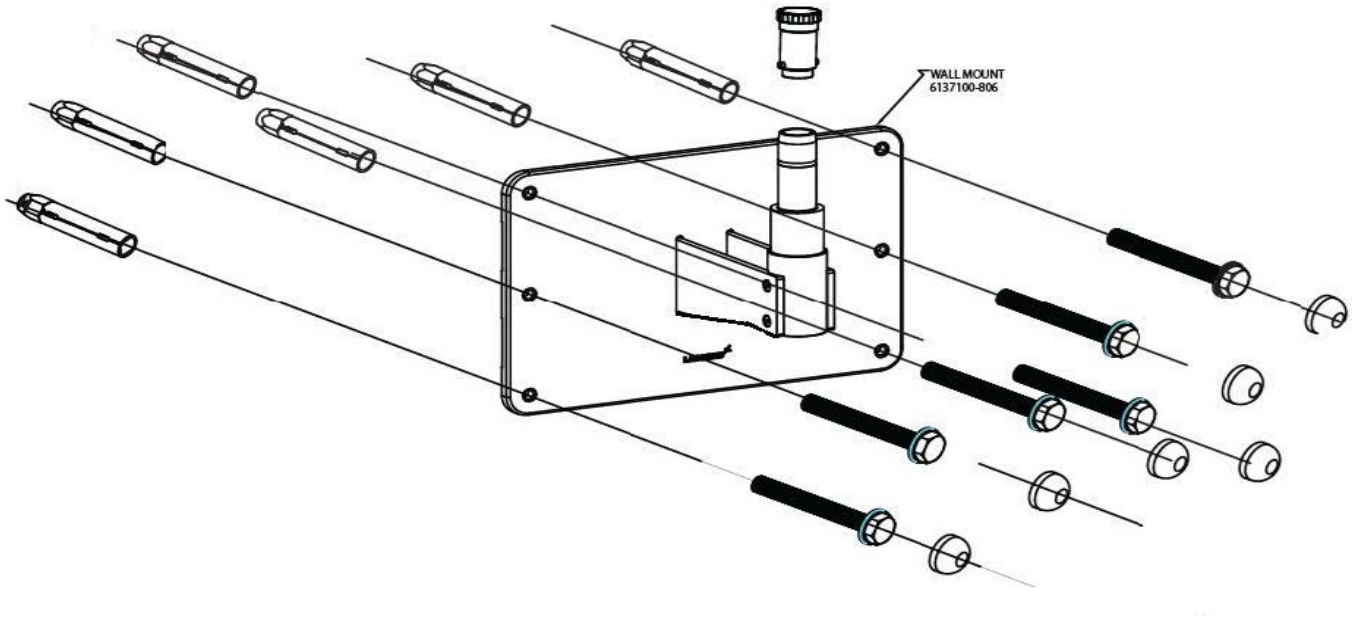

VERTICAL WALL MOUNT INSTALLATION REFERENCES (SOLID BRICK WALL)

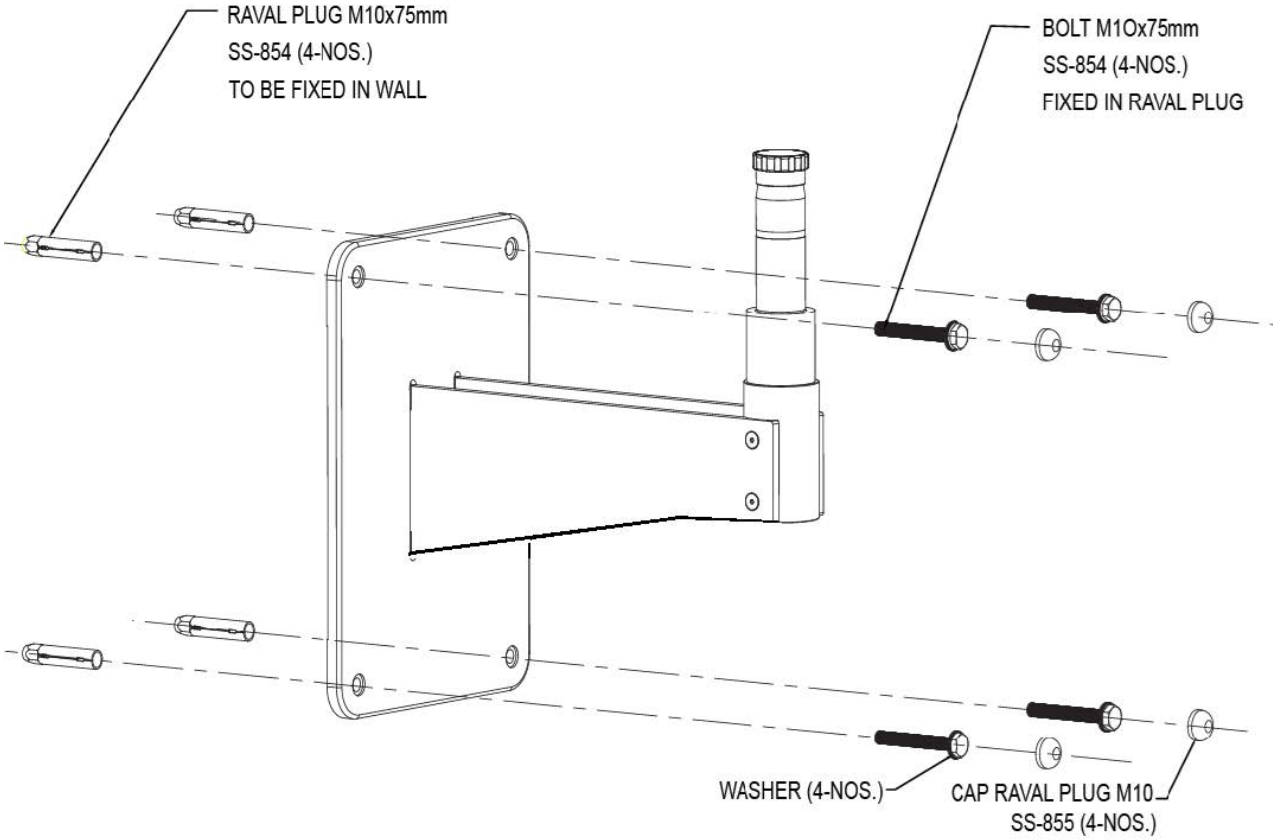

Fig. 18

8. INSTALLATION PREPARATION (WALL MOUNT)

WALL MOUNT INSTALLATION

Before Initiating the installation of Labomed Wall Mount Microscopes, You must ensure that there is proper space available as per the configuration selected. Refer to Figure 15 & 15a.

Measure the distance between the centres of the studs. The Labomed Wall Mount Model is designed to mount directly on a wall with wood studs spaced 406mm (16”) centre or on solid brick/concrete wall minimum 229mm (9”) thick wall.

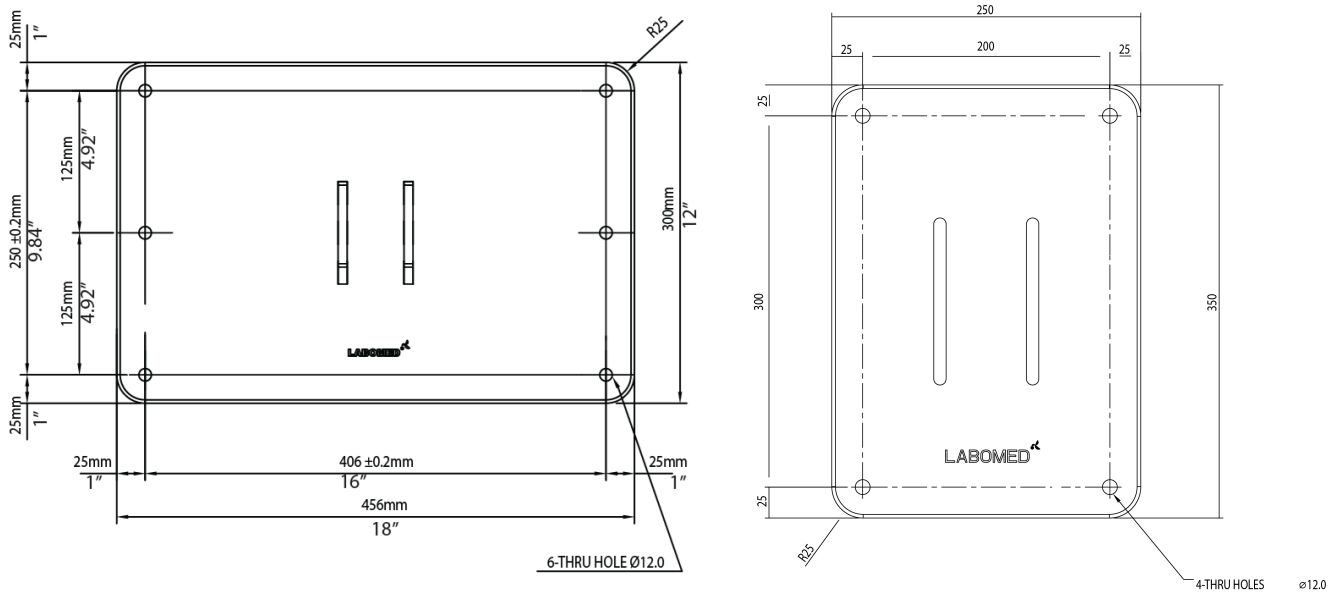

Fig. 19

LIST OF CONTENTS

1. **Paper Template For Marking – 1**
2. **Wall Mount Assembly – 1**
3. **Hexagonal Lag Bolts (For Wooden Walls) – 6**
4. **Plain Washer – 6**
5. **RAWL Anchor Bolts (For Masonry Walls) – 6**
6. **Cap Set Bolt - 6**

WALL MOUNT INSTALLATION PROCEDURE

WALL MOUNT INSTALLATION ON STANDARD SIXTEEN INCH (16’’ 406MM) WOODEN WALL STUD SPACING

For securing the Wall Mount System to construction using wooden wall studs spaced on 16 (406 mm) Inch centre, it is recommended that 3/8" x 4" hex head lag screws are used.

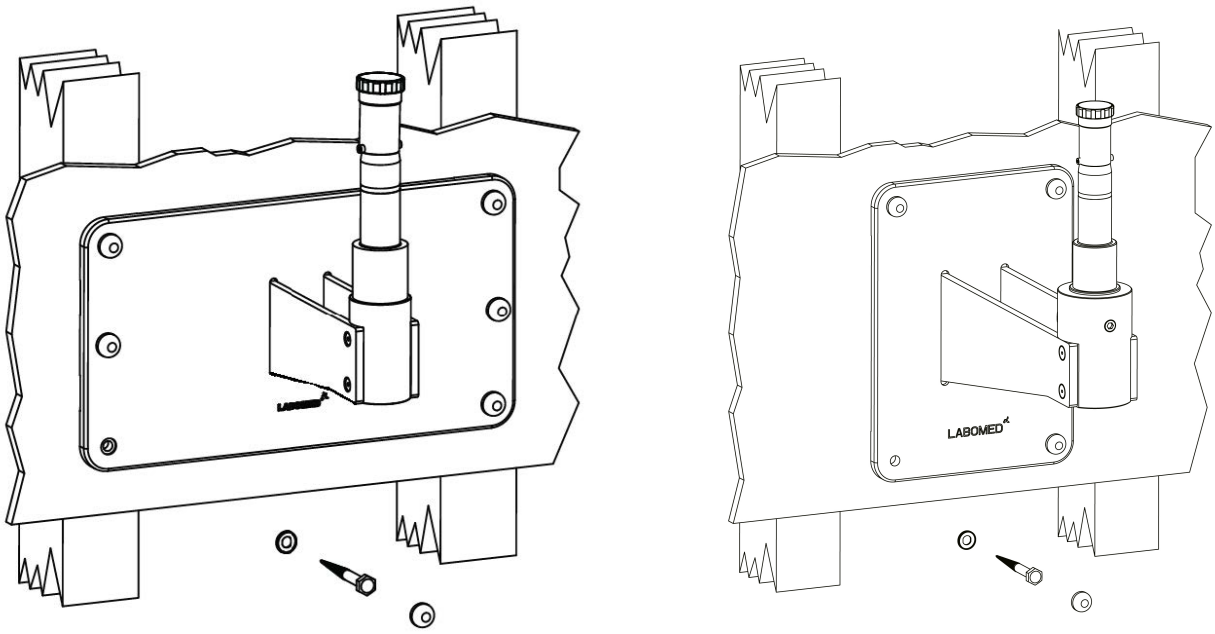

Fig. 20

WARNING: THE MOUNTING HARDWARE SUPPLIED FOR WOODEN WALL IS NOT DESIGNED FOR INSTALLATION TO WALL WITH STEEL STUDS OR TO CINDER BLOCK/MASONRY WALLS.

WALL MOUNT INSTALLATION PROCEDURE (continued)

LEVELLING THE WALL MOUNT PLATE ASSEMBLY

It is important to ensure that wall mount (6137100-806) is level both horizontally and vertically, after installation. Levelling of the wall mount assembly is necessary to prevent the microscope system from drifting from side to side when it is being used at full extension.

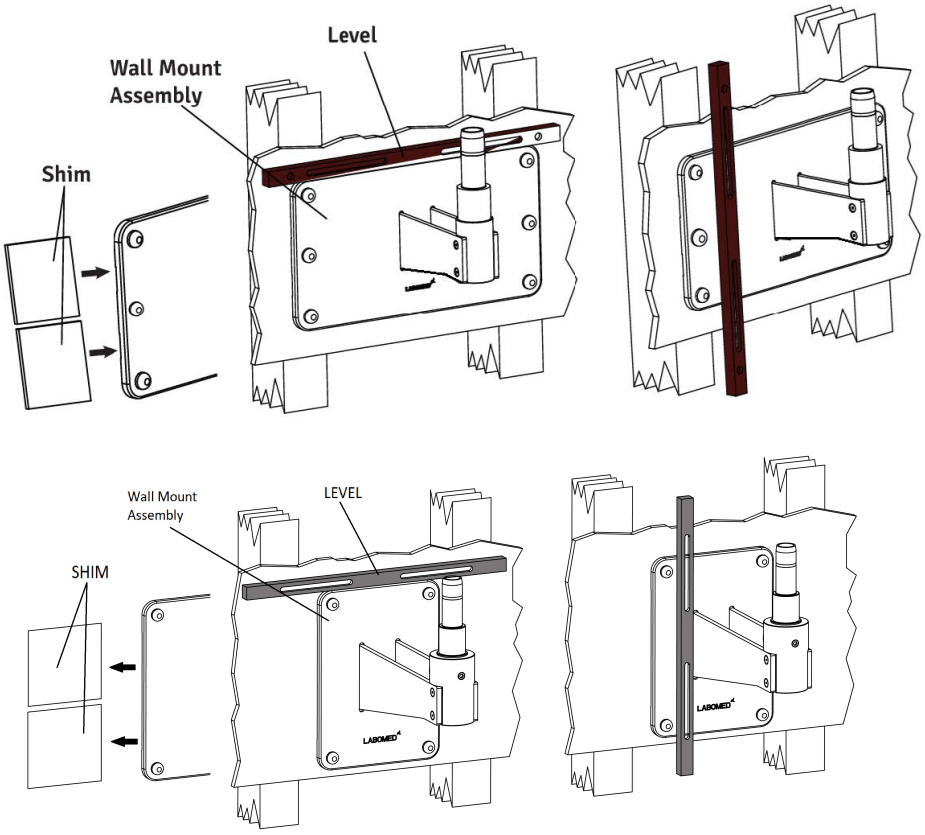

Fig. 21

1. **Slightly tighten the bolts on the top side- leaving the bottom bolts slightly loosened.**
2. **Place a level across the top of the back plate to check the horizontal levelling. See Figure 21.**
3. **Use the 17mm socket and ratchet to slightly loosen the 3/8” x 4" hex head lag screws in the corners of the back plate.**
4. **Adjust the back plate until it is level and tighten the three lag screws on the bottom leaving the top lag screws loosened slightly.**
5. **Place a level vertically along the face of the wall Mount, on both sides, to ensure it is perpendicular to the floor. See Figure 21.**
6. **If the wall mount is not perpendicular, insert shim material between the wall mount and the wall next to the lag screws Refer figure-21. Check with the level and tighten the lag screws once the mount is level.**
7. **Check the other side and insert shims as needed and then tighten the lag screws.**
8. **When the Wall Mount is level, both horizontally and vertically, securely tighten all Six lag screws.**

WALL MOUNT INSTALLATION PROCEDURE (continued)

WALL MOUNT INSTALLATION ON SOLID BRICK MASONRY WALL MINIMUM 9” THICK

For securing this Wall Mount Model to a Solid Brick wall, Use the Six(6) M10 X 75mm RAWL Anchor bolts provided. See Figure below.

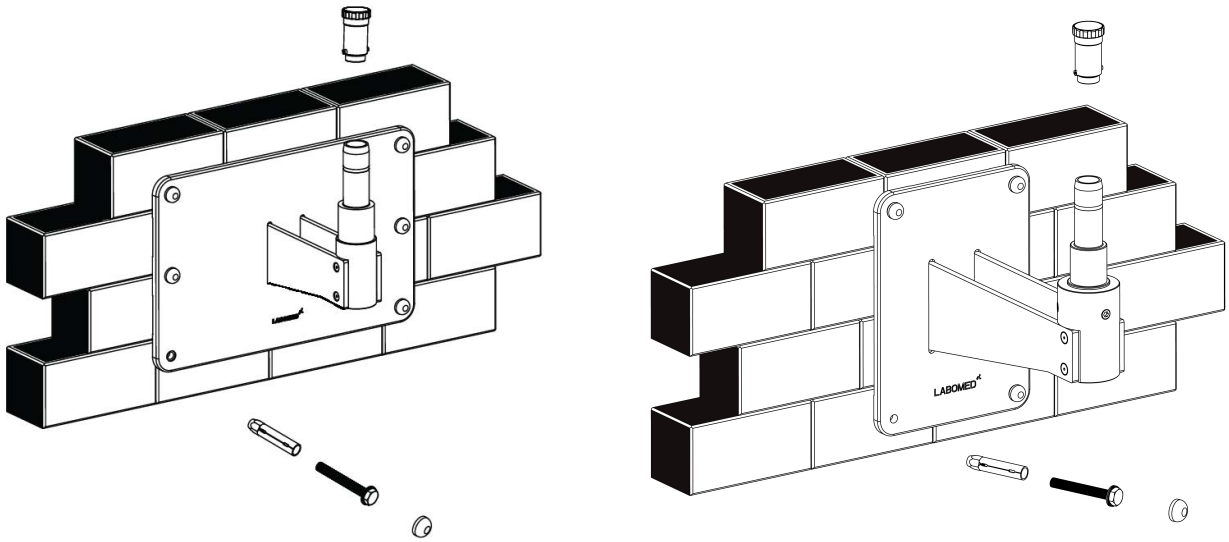

Fig. 22

1. **Determine the desired location on the wall where the microscope is to be mounted.**
2. **Place the Paper template against the wall and fix with tape. Mark Six (6) holes ensuring template is straight.**
3. **Using a 16mm” masonry drill bit, drill Six (6) 16mm holes min 65mm deep in the wall spaced as Outlined above.**
4. **Use 10mm X 75mm long RAWL Anchor bolts.**
5. **Place the RAWL bolts through the holes and carefully insert the bolts into the wall.**
6. **Take out the threaded bolt.**
7. **Position the wall mount against the wall. Place flat washer under head of coach bolt and thread in the Six (6) RAWL bolts in the wall.**
8. **Using a 17mm socket and ratchet arrangement, tighten the Six (6) RAWL bolts securing the wall mount into position. Ensuring the wall mount (top edge and front face) is level.**

NOTICE: Shims and shim materials are to be provided by the customer and are not furnished by Labomed. There are numerous shims materials commercially available and no specific type or brand name is implied.

WALL MOUNT INSTALLATION PROCEDURE (continued)

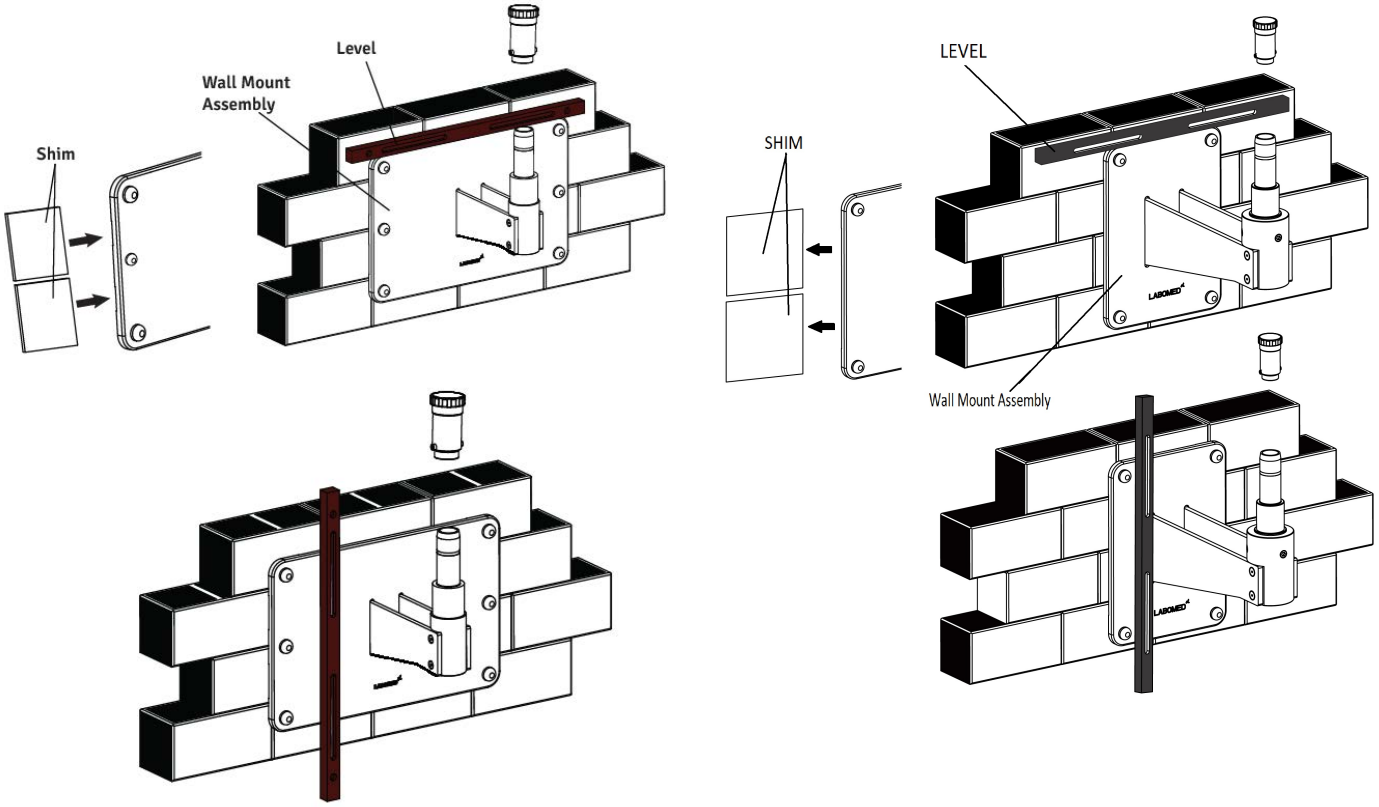

Fig. 23

WALL MOUNT INSTALLATION PROCEDURE (continued)

LEVELLING THE WALL MOUNT ON MASONRY WALL

1. Slightly tighten the bolts on the top side- leaving the bottom bolts slightly loosened.
2. Place a level across the top of the back plate to check the horizontal levelling. See figure-23.
3. Use a 17mm Socket & Ratchet arrangement to slightly loosen the Six (6) toggle bolts in the corners of the back plate.
4. Adjust the wall mount until it is level and tighten the three RAWL bolts on the bottom leaving the top toggle bolts loosened slightly.
5. Place a level vertically along the face of the back plate, on both sides, to ensure it is perpendicular to the floor. See figure-23
6. If the back plate is not perpendicular, insert shim material between the back plate and the wall next to the RAWL bolts. Check with the level and tighten the toggle bolts once the mount is level.
7. Check the other side and insert shims as needed and then tighten the toggle bolts. See figure-23.
8. When the back plate is level, both horizontally and vertically, securely tighten all Six toggle bolts.

INSTALLING THE HORIZONTAL ARM ASSEMBLY

1. Open the microscope arm box and take out the arm.
2. Unscrew the threaded plug from wall mount shaft as shown in fig-23.
3. Assemble the Arm on wall mount shaft referring fig.22 and Re-install the threaded plug into place.
4. Complete the rest of Installation as per fig.1,2,3 or 4 as ordered.

WALL MOUNT INSTALLATION PROCEDURE (continued)

CONSTRUCTIONAL REQUIREMENTS FOR THE WALL MOUNT

1. **The wall mount assembly must only be installed as recommended in this manual.**
2. **The construction specialist responsible must confirm in writing that the applicable regional and local bodies & regulations have been complied and the points listed below are taken care. The customer must keep this confirmation with his records on the wall mount. A copy of this document must be provided to labomed representative dealer.**
3. **The wall on which wall mount is to be mounted must have the following load capacity:**
   Perpendicular force: minimum 1500 Nm

   Also take into account any additional loads acting on the wall.

4. **The wall mount must be aligned in a parallel position (max. deviation ±1°).**

NOTE:
If an existing wall mount is ever exchanged, never re-use the old anchors. New anchor holes must be drilled. When calculating the effective strength of the new anchors, make sure to take into account the weakening effect of the old holes in the wall.

On the basis of the above aspects, the person responsible for the building must decide on and take responsibility for the most suitable method of anchoring.

WALL MOUNT INSTALLATION PROCEDURE (continued)

CONTROL AND POWER SUPPLY OF THE SYSTEM

NOTE:
The maximum weight of the surgical microscope including accessories must not exceed 50 kg and the respective weight of our accessory equipment is specified in the price list.

The weight of the mount including the surgical microscope is as follow:

Wall mount kit	**:**	**12 kg**
Surgical microscope	**:**	**22 kg**
Total	**:**	**34 kg**

Power Line	**:**	**3/1.5mm 2**
Fuse	**:**	**4.0 Amp**
Power Consumption	**:**	**Max. 200W**

NOTE:
A socket with properly installed protective earth connection must be provided at the installation site.

Potential equalization: Take the necessary actions in the building to include the instrument in the protective measure of "potential equalization".

NOTE:
The series 6183000 suspension systems including the components mentioned here comply safety requirement with CE, MDR 2017/745 and IEC 60601-1-3.2.

Such activities as the installation of the flange and the installation of conduits and electrical lines are the customer's responsibilities.

List of Contents: Wall Mount Kit

1. **Raval Plugs : 06 Nos**
2. **Washers : 06 Nos**
3. **Wall Mount : 01 Nos**

9. WARNING AND CAUTIONS

LABOMED is not responsible for the safety and reliability of this instrument when:

- **Assembly, disassembly, repair, or modification is made by unauthorized dealers or persons.**
- **The instrument is not used in accordance with this user manual.**

A WARNING is an instruction that draws attention to the risk of injury or death.

WARNING: USERS OF THIS EQUIPMENT SHOULD BE THROUGHLY TRAINED IN THE APPROPRIATE MEDICAL PROCEDURES. FURTHERMORE, THEY SHOULD TAKE THE TIME TO READ AND UNDERST AND THESE INSTRUCTIONS BEFORE PERFORM ANY PROCEDURE. THEY SHOULD ALSO READ AND UNDERSTAND THE INSTRUCTIONS FOR ANY OTHER EQUIPMENT USED IN CONJUNCTION WITH THIS MICROSCOPE (i.e. ELECTRO SURGICAL GENERATORS). FAILURE TO DO SO MAY RESULT IN INJURY TO THE PATIENT AND/OR DAMAGE TO THE MICROSCOPE.

WARNING: THIS INSTRUMENT SHOULD BE USED IN STRICT ACCORDANCE WITH THE INSTRUCTIONS OUTLINES IN THIS USER'S GUIDE. THE SAFETY OF THE OPERATOR AND THE PERFORMANCE OF THE INSTRUMENT CANNOT BE GUARANTEED IF USED IN A MANNER NOT SPECIFIED BY LABOMED.

WARNING: DO NOT REPAIR OR SERVICE THIS INSTRUMENT WITHOUT AUTHORIZATION FROM THE MANUFACTURER. ANY REPAIR OR SERVICE TO THIS INSTRUMENT MUST BE PERFORMED BY EXPERIENCED PERSONAL OR DEALERS WHO ARE TRAINED BY LABOMED OR SERIOUS INJURY TO THE OPERATOR OR PATIENT MAY OCCUR.

WARNING: MODIFICATIONS TO THIS INSTRUMENT ARE NOT ALLOWED. ANY MODIFICATION TO THIS UNIT BE AUTHORIZED BY LABOMED. UNAUTHORIZED MODIFICATIONS MAY CAUSE SERIOUS INJURY TO THE OPERATOR OR PATIENT.

WARNING: IF THIS INSTRUMENT IS MODIFIED, APPROPRIATE INSPECTION AND TESTING MUST BE CONDUCTED TO ENSURE CONTINUED SAFE USE OF THIS INSTRUMENT.

WARNING: ENSURE THAT THE VOLTAGE APPLIED TO THE UNIT IS THE SAME AS THE VOLTAGE THAT IS INDICATED ON THE DATA PLATE OR DAMAGE TO THE UNIT MAY OCCUR.

WARNING: TO USE IN FLUCTUATION VOLTAGE ENVIRONMENT CONSTANT VOLTAGE STABILIZER OR UPS IS RECOMMENDED FOR SAFE & EFFICIENT USE OF DEVICE.

WARNING: THIS INSTRUMENT MUST BE PLUGGED INTO AN OUTLET WITH AN EARTH GROUND. DO NOT REMOVE OR DEFEAT THE EARTH GROUND CONNECTION ON POWER INPUT CONNECTOR OR THE UNIT'S POWER CORD OF THIS INSTRUMENT OR DAMAGE TO IT AND/OR INJURY TO THE OPERATOR OR PATIENT MAY OCCUR.

WARNING: THE EQUIPMENT OR SYSTEM SHOULD NOT BE USED ADJACENT TO OR STACKED WITH OTHER EQUIPMENT AND THAT IF ADJACENT OR STACKED USE IS NECESSARY, THE EQUIPMENT OR SYSTEM SHOULD BE OBSERVED TO VERIFY NORMAL OPERATION IN THE CONFIGURATION IN WHICH IT WILL BE USED.

WARNING AND CAUTIONS (continued)

WARNING: THIS INSTRUMENT IS NOT SUITABLE FOR USE IN THE PRESENCE OF FLAMMABLE ANESTHETIC MIXTURES, SUCH AS OXYGEN OR NITROUS OXIDE.

WARNING: LED RADIATION - DO NOT STARE DIRECTLY INTO THE BEAM WHEN THE MICROSCOPE IS IN THE ON POSITION.

WARNING: THE USE OF ACCESSORIES OR CABLES OTHER THAN THOSE SPECIFIED, WITH THE EXCEPTION OF THOSE SOLD BY THE MANUFACTURER AS REPLACEMENT PARTS FOR THE INTERNAL COMPONENTS, MAY RESULT IN INCREASED EMISSIONS OR DECREASED IMMUNITY OF THE EQUIPMENT OR SYSTEM.

A CAUTION is an instruction that draws attention to the risk of damage to the product.

⚠ **CAUTION: THE INTERNAL CIRCUITRY OF THE INSTRUMENT CONTAIN ELECTROSTATIC SENSITIVE DEVICES (ESD) THAT MAY BE SENSITIVE TO STATIC CHARGES PRODUCED BY THE HUMAN BODY. DO NOT REMOVE THE COVERS WITHOUT TAKING PROPER ESD PRECAUTIONS.**

CAUTION: DO NOT USE SOLVENTS OR STRONG CLEANING SOLUTIONS ON ANY PART OF THIS INSTRUMENT, AS DAMAGE TO THE UNIT MAY OCCUR SEE THE CARE AND MAINTENANCE SECTION FOR DETAILED CLEANING INSTRUCTIONS.

CAUTION: MEDICAL ELECTRONIC EQUIPMENT NEEDS SPECIAL PRECAUTIONS WITH RESPECT TO ELECTROMAGNETIC CHARGE (EMC) AND NEEDS TO BE INSTALLED AND SERVICED ACCORDING TO THE EMC INFORMATION PROVIDED IN THE ACCOMPANYING DOCUMENTS.

CAUTION: PORTABLE AND MOBILE RF COMMUNICATIONS EQUIPMENT CAN AFFECT MEDICAL ELECTRICAL EQUIPMENT.

CAUTION: THIS INSTRUMENT IS NOT TO BE USED NEAR HIGH-FREQUENCY EMITTING SURGICAL EQUIPMENT.

CAUTION: DO NOT CONNECT ANY EQUIPMENT TO THE DEVICE OTHER THAN THOSE INTENDED FOR USE WITH THE DEVICE.

CAUTION: DO NOT USE A CONVERTER ADAPTER THAT WILL CONVERT THE THREE-PRONG AC PLUG TO A TWO-PRONG LINE PLUG, THE POWER SUPPLY IN THIS MICROSCOPE WILL NOT BE PROPERLY GROUNDED, AND ELECTRIC SHOCK MAY RESULT.

CAUTION: REMOVE THE AC POWER PLUG FROM THE WALL SOCKET WHILE CHECKING FOR A BLOWN FUSE.

CAUTION: DO NOT ROLL THE MICROSCOPE OVER CABLES OR HOLES.

CAUTION: DO NOT REMOVE FERRITE BEADS IF APPLIED TO CABLES.

CAUTION: DEVICE SHOULD NOT BE OPERATED WITHOUT SILICONE COVERS FOR HANDLES AND ALL KNOBS.

10. EXPLANATION OF SYMBOLS

Caution:
Observe all warning labels and notes!
If any label in missing on your instrument or has become illegible, please contact us or one of our Authorized representatives. We will supply the missing labels.

Brightness Control: After the illumination has been switched on, the user can continuously adjust brightness by turning the knob appropriately.

Accompanying documents must be consulted.

Compliance to medical device regulation. (EU) MDR 2017/745.

Protective earth.

This way up – indicates the correct upright position of the transport package.

Keep dry – the transport package shall be kept away from rain.

Manufacturer.

Fragile- content of the transport package are fragile and should be handled with care.

Electromagnetic interference can occur in the vicinity of devices carrying this symbol.

Alternate current.

Recycling of packaging materials.

Do not over balance more than 5 degree.

Separate disposal of waste electrical equipment.

Unsafe for use with MR (Magnetic Resonance).

Permissible humidity range during transport and storage.

Permissible pressure range during transport and storage.

The product complies with US and Canadian safety requirements.

Permissible temperature range during transport and storage.

Medical Device.

Authorized European Representative

Serial No (YY-Year, MM-Month, XXXX-Serial No)

Model No

Fuse

Max. Safe Load 12 Kg

IP 20 Ingress Safety Protection

11. STANDARDS AND DIRECTIVES

The instrument described in this user manual has been designed in compliance with the following standards:

ISO 8600-3 First edition 1997-07-01 AMENDMENT 1 Optics and Optical instruments - Medical endoscopes and endoscopic accessories Part 3: Determination of field of view and direction of view of endoscopes with optics.

ISO 8600-5 First edition 2005-03-15 Optics and phonetics-Medical endoscopes and endotherapy Devices. Part 5: Determination of field of view and direction of view of endoscopes with optics.

ISO 8600-5 First edition 2005-03-15 Optics and phonetics-Medical endoscopes and endotherapy devices Part 5: Determination of optical resolution of rigid endoscopes with optics.

ISO 13485 quality management systems approved by UL.

ISO 14971 Risk management to medical devices.

DIRECTIVE / REGULATIONS:

Regulations (EU) MDR 2017/745

IEC 60601-1-3.2

IEC 60601-1-2-4.1 ed.

EN 55011:2007

CLASSIFICATIONS

For Europe, per MDR 2017/745, the unit is a Class I instrument, per rule 13, Annex VIII.

For the United States, the FDA classification is Class I.

Please observe all applicable accident prevention regulations.

IP Code - IP 20

12. CONDITION OF INSTRUMENT AT TIME OF UNPACKING/SUPPLY

The appliance is delivered in sub-assembled modular groups along with one Installation Kit and one user manual.

Please check for the following when unpacking the device:

1. **Mobile supporting base with brakes on Castor wheels, or the type of mounting system.**
2. **Column, depending on the type of mount ordered.**
3. **Swivel arm and suspension arm assembly with fibre optic cable.**
4. **Inclined coupling with magni-changer assembly and objective (as ordered)**
5. **Observation Head, (inclined or ergo) as ordered.**
6. **Pair of eyepieces, as ordered.**
7. **Power cord.**
8. **Installation Kit**
    A. **Allen wrench 5 mm**
    B. **Allen wrench 8 mm**
9. **User manual**

13. INSTALLATION OF BASE (MOBILE STAND)

1. **Open the box containing Star Base Bottom and wooden support block shown in Fig. 24.**

Fig. 24

2. **Take out wooden support block and star base bottom from the box and place it on wooden support. Refer Fig. 25.**

Fig. 25

4. **Refer Fig. 26 Open other two boxes and take out the 5 base legs and fix them onto the star base bottom with 8mm Allen wrench, then take out the Top plate and place onto the Assembled base and then fix the Guide plug with 4 mm Allen Wrench as shown in Fig. 27.**

Fig. 26

5. **Assembled base as shown in Fig.28.**

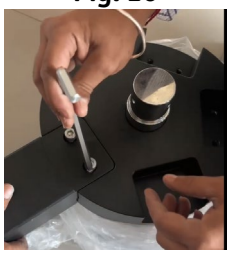

Fig. 27

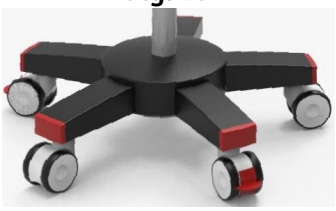

Fig. 28

INSTALLATION OF BASE (MOBILE STAND) continued

6. **Open the microscope box. Take out (column) from the box. Mount the column onto a guide plug in base by aligning the Corresponding holes in Column (A) and shaft (B). Secure it with (3) M6x16mm Allen Screws (C) using 4mm Allen Key as shown in fig.-29.**

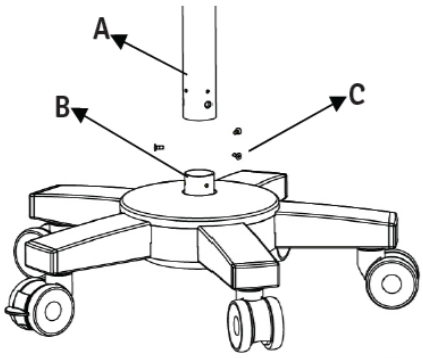

Fig. 29

7. **Take out the Arm Assembly from the same box and follow the Instructions below: (Refer Fig. 30)**
   a. Ensure that the swivel arm lock knob (D) is slightly loosened.
   b. Mount the Arm Assembly into Shaft (F).
   c. Align three holes (E) with tapped hole on Shaft (F).
   d. Use Allen Wrench 4mm and tighten 2 M6x16mm Allen screws (G).

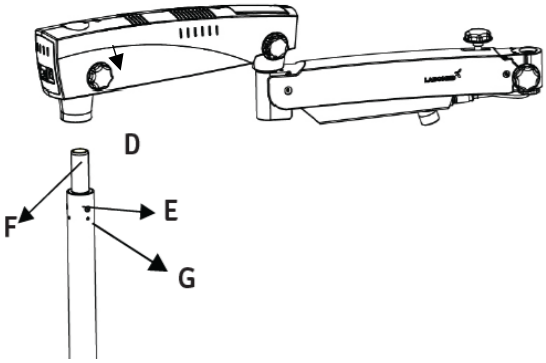

Fig. 30

8. **Open another box and take out the ABA carrier assembly. Refer Fig. 31**
   - **a. Insert the Auto Balancing Arm (ABA) shaft (H) into the suspension arm.**
   - **b. Lock the auto Balancing Arm (ABA) with the threaded Knob (I).**
   - **c. Make sure the safety screw (1) is installed and tightened.**
   - **d. Ensure magnichanger handles (K) have silicone covers.**

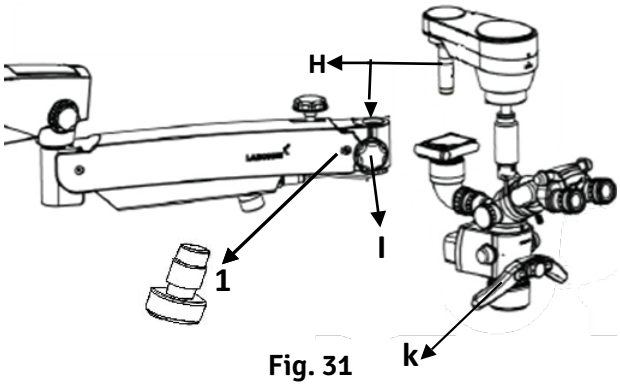

Fig. 31

CAUTION: Device should not be operated without silicone covers for handles and all knobs.

14. MICROSCOPE INSTALLATION

4. Install the standard accessories onto the carrier assembly as mentioned below:

a. Open the Box and take out the ABA arm (A) with mount for DBS. Loosen the 2 M4 grub screw of Mount (1) by 2mm allen key and Fix Double Beam Splitter inclined (B) or SBS-R Single Beam Splitter Rear View (C) as received on to the mount (1) by re-tightening the 2 m4 grub screw. Ref. fig. 32

b. Fix magnichanger (D) on (B) or (C) as received using 2mm Allen key. Ref. fig. 32

c. Remove the End cap from Double Beam Splitter inclined or SBS-R by rotating the ring in Anticlockwise and fix DSLR Camera adapter (E) by matching the slot and rotate the ring clockwise to tighten the same. Loosen the M4 Grub screw by 2mm allen key on DSLR adapter and fix the supplied Mount (Canon, Nikon, Sony (E.1). Retighten the M4 grub screw to secure C-mount. Ref. fig. 32

d. Fix the Ergo Head 0°-210° Tiltable Binocular (F) on the magnichanger (D) using 2mm Allen key. Ref. fig. 32

e. Fix the NuVar Variable objective (G) by rotating in clockwise position. Ref. fig. 32

f. Set both eyepieces to (O) dioptre. Fig. 33

Note: Please ensure the accessories are fixed properly to have better visual results.

5. Mount the light guide by completing the steps below:

a. The light guide comes pre-routed through the swivel and suspension arm in a wire mesh (which houses the LED illumination system and fibre optic cable).

b. A wire mesh for Cable routing is Permanently fixed to Suspension arm at point (5). Ref. Fig. 34

c. Fold and gather wire mesh with back cover and connect the 5 Pin male and female connector (2) for illumination control as per guidance on the label. Then insert the Fibre optic cable into the light guide (3). Ref. Fig. 34

d. Fix the back cover (4) with screws. Then connect the 4pin male female connector (1) for powering up the ABA (Auto balancing Arm) Electromagnetic clutch. Ref. fig. 34

e. Make sure the light guide has been routed through wire mesh into the carrier system such that the microscope is not obstructed and can be moved in its entire range of movement without stretching, kinking, or twisting the light guide.

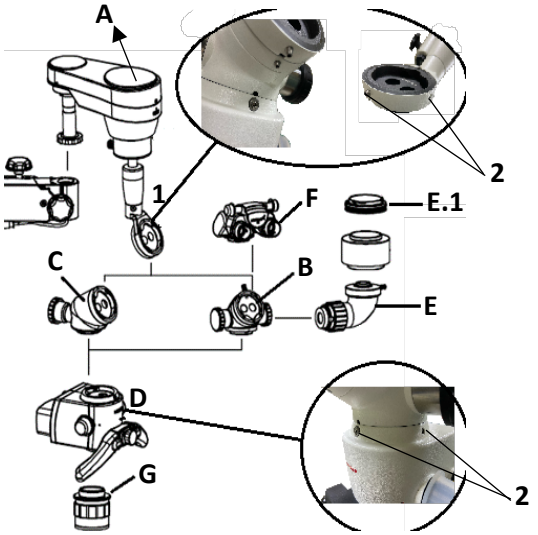

Fig. 32

Fig. 33

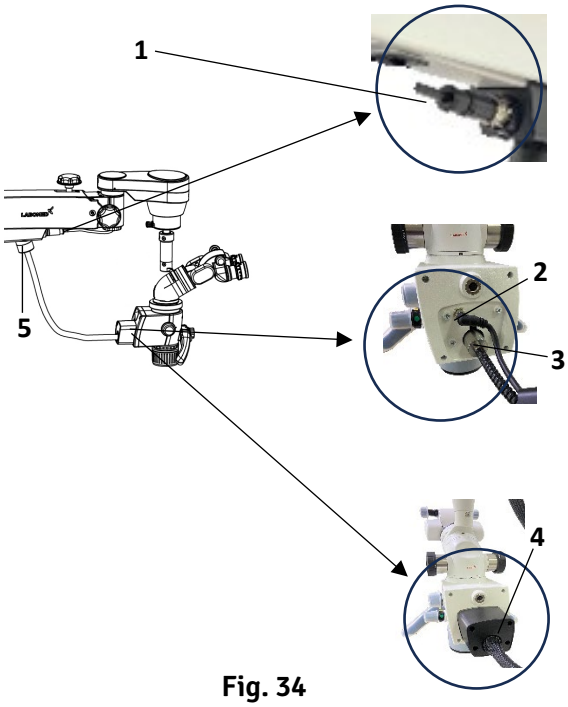

Fig. 34

15. ELECTRICAL CONNECTIONS

1. **Connect the power cable to the AC inlet socket (1) provided on the back of the swivel arm as shown in the fig.35. Switch on the power from on/off switch (2).**

   Note: Power supply is designed with universal input 100V - 240V AC, 50/60HZ. To plug in follow instruction on electrical label provided at bottom of the arm as shown (3) here in Fig.35.

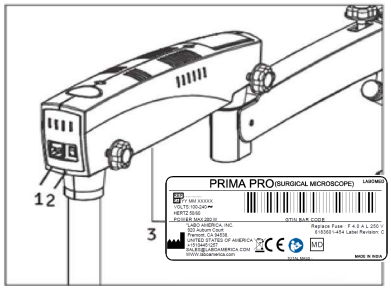

Fig. 35

   Note: If Voltage fluctuates more than +/- 10% of the rated voltage at the place of installation use voltage stabilizer to save the power supply.

1. **REPLACING THE ILLUMINATION SOURCE**
   Switch off the microscope. Open the swivel arm covers and replace the illumination assembly (A) with new assembly. Secure back the arm covers. Refer Fig. 36.

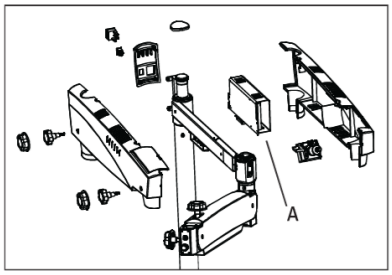

Fig. 36

2. **FUSE REPLACEMENT**
   The fuse is located with the AC inlet, provided near the on/off switch. Use a flat head screw driver to open the fuse compartment. Two fuses are provided in this, i.e. one is live fuse and second as spare fuse. Replace the blown fuse with live fuse and secure back the fuse compartment. For fuse replacement refer label shown in fig.37.

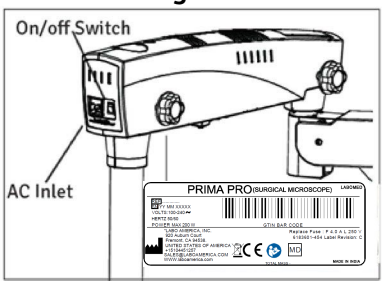

Fig. 37

ELECTRICAL CONNECTIONS (continued)

3. DATA PLATE FOR **PRIMA pro** MICROSCOPE

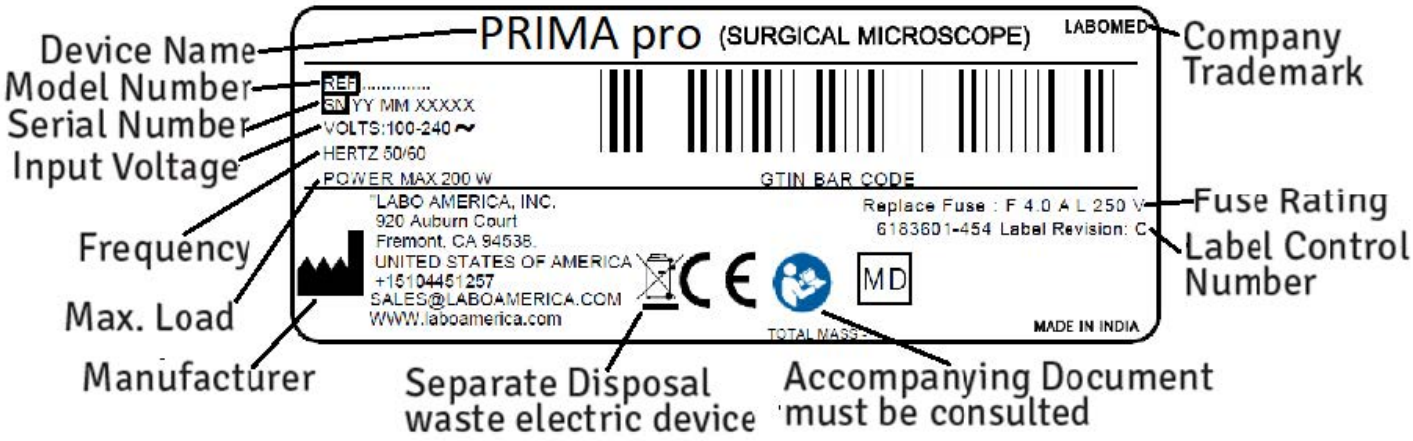

4. PRIMA WIRING CODING DIAGRAM

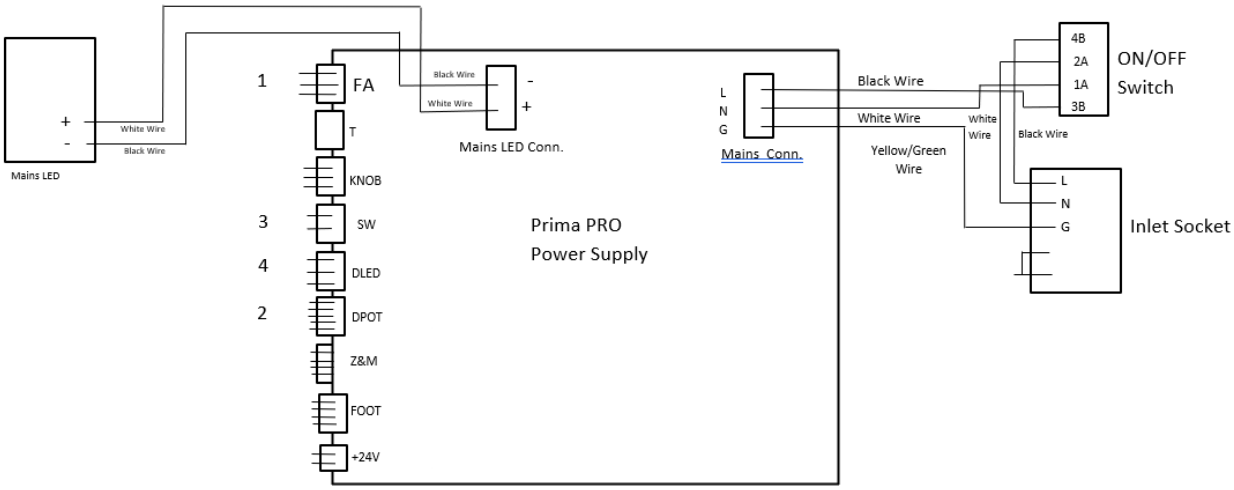

Wire Marking No.	Power Supply Marking	Description
1	FAN	Main LED Fan Wire
2	DPOT+Z&M	Digital potentiometer
3	SW	Limit Switch Wire
4	DLED	Dual LED Wire

16. CONTROL ELEMENTS

1. **ON/OFF SWITCH**

   It is located on the back of the swivel arm Ref. Fig. 35. At '2' position, microscope is on and cooling fan starts running.

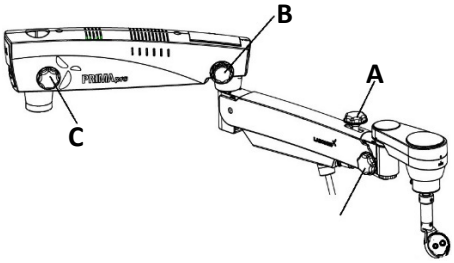

Fig. 38

⚠ **Keep the intensity control knob at Minimum level before switching on the system.**

To save burning life of LED, switch OFF the appliance if the microscope is not in use for longer time.

Note: Blinking or No-Light

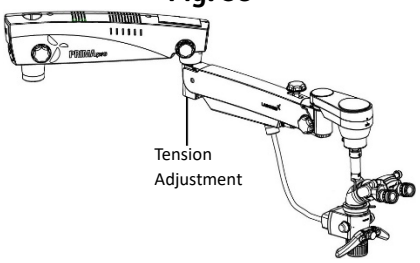

Fig. 39

2. **INTENSITY CONTROL KNOB**
   It is located in front of the magnichanger shown as (A) in Fig.-40. Brightness of field of view can be adjusted as per user comfort using intensity control knob.

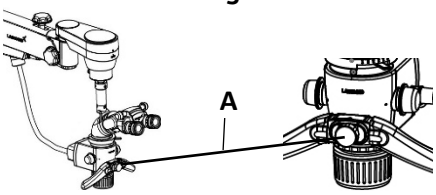

Fig. 40

3. **12 VOLT DC CONNECTOR**
   It is provided as X for camera input supply located at the back of magnichanger housing. Refer Fig. 41.

Fig. 41

4. **SWIVEL ARM LOCKING KNOB**
   This knob helps you to lock the movement of swivel arm at the desired position after initial focusing of the attendance area by turning it clockwise, knob is shown as (C) in Fig.- 38.

5. **SUSPENSION ARM LOCKING KNOB**
   This knob shown as B in Fig. 38 locks the rotary movement of the suspension arm at the desired position by turning it clockwise.

6. **SUSPENSION UP/DOWN MOVEMENT LOCKING KNOB**
   This knob shown as A in Fig. 38 lock the UP/DOWN movement of the suspension arm at the desired height by turning it clockwise.

7. **ADJUSTING TENSION ON ROTARY MOTION OF INCLINED CARRIER**
   Refer Section 23 TENSION ADJUSTMENT for more details.

CONTROL ELEMENTS (continued)

6. FILTER CHANGE KNOB

Refer Fig. 42 (L). Filter change knob is located on left side of the magnichanger housing. Rotate knob to change the filter position to yellow, blue, green, Truelux or no filter position.

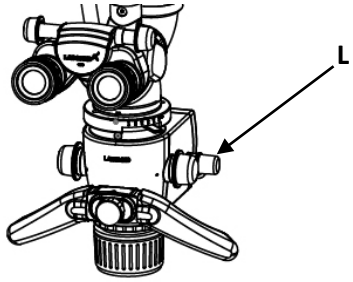

Fig. 42

7. BRAKES

Locks the stand from unwanted movement by pressing down the three brakes provided on caster wheels. To unlock press upper portion of brake. See (M) Fig. 43.

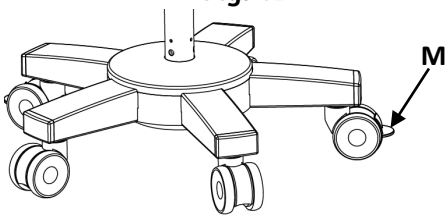

Fig. 43

8. LED FEATURES

Single Chip White LED with over 2250 white lumen's. Lumen maintenance of greater than 70% after 60000 Hrs. Environment friendly ROHS Compliant. Typical spectrum is 400 - 700 nm.

17. INSTRUCTIONS FOR USING THE MICROSCOPE

WARNING: MR INSTRUMENT IS UNSAFE FOR MRI ENVIRONMENT.

SETTING UP THE MICROSCOPE

1. **Lock all the brakes on base wheels after setting up of microscope on the attendance area for stability.**

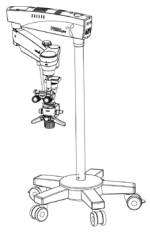

Fig. 44

2. **Although tension on microscope is factory pre-set as per the ordered configuration. Still user can adjust up and down force by turning the allen screw clockwise or anticlockwise with the help of a 8mm allen wrench. Refer section 23 for more details. Refer Fig.-55 to see the exact location of tension adjusting screw.**

3. **Lock the up & Down movement of suspension arm using locking knob (B) in Fig.45 after focusing of the area of interest.**

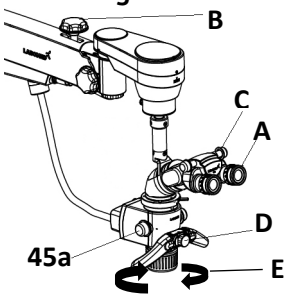

Fig. 45

4. **Adjust Position of Ergo Head as user convenience.**

5. **Adjust the eye distance as per IPD (C) scale according to your convenience.**

6. **Set Both Eye Pieces (A) dioptre to Zero.**

7. **The illumination is controlled through the control knob (D), Fig.45. Rotate it clockwise or anticlockwise to achieve desired illumination level.**

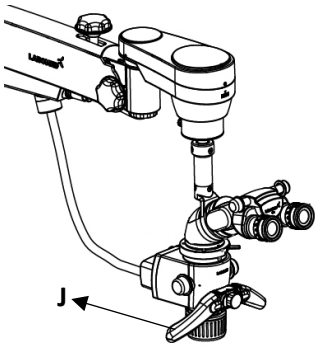

Fig. 46

SETTING UP OF MAGNIFICATION

1. **Adjust to highest magnification with one of the rotating knobs (45a) provided at magnification changer.**

2. **Fine focusing is done through the CMO (E) fine focus ring.**

3. **Absolute centring of focused area in field of view can be done by manual handles (J). Ref. Fig. 46**

4. **Make sure that the magnification changer is engaged in the index point at the click stop position.**

5. **Focusing from highest magnifications, change all the magnification field of view must be in focus only fine focusing in required for sharp focus.**

INSTRUCTIONS FOR USING THE MICROSCOPE (continued)

MAIN MICROSCOPE

The objective lenses with focal lengths of 250mm, 300mm and 400mm are available for different working distances.

Also Variable working distance CMO like NuVar 7, NuVar 10 and NuVar 20 also available on demand. For more details of NuVar refer brochure.

The ergonomic 210 degree binocular tube is provided for the main surgeon. The large tilt range allows work with minimum fatigue.

The standard equipment includes eyepieces with a magnification factor of 10X (option:12.5X).

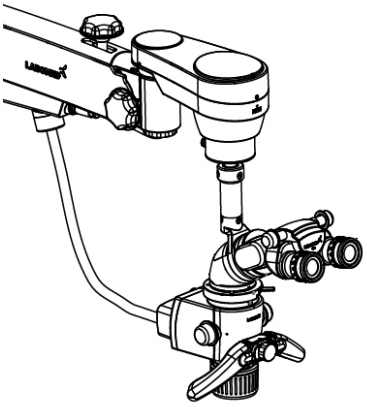

Fig. 47

CHANGING THE OBJECTIVES AND EYEPIECES

1. **The objectives can be taken out by rotating in anti-clock wise direction. It can be thread in by rotating in clockwise direction.**

2. **To install the eyepieces, insert in the eye tubes of observation head.**

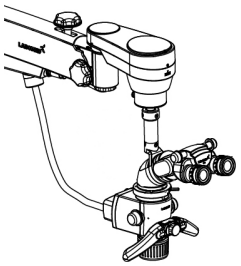

Fig. 48

18. SYSTEM CONFIGURATION DIAGRAM (PRIMA pro – Part No. 6183601)

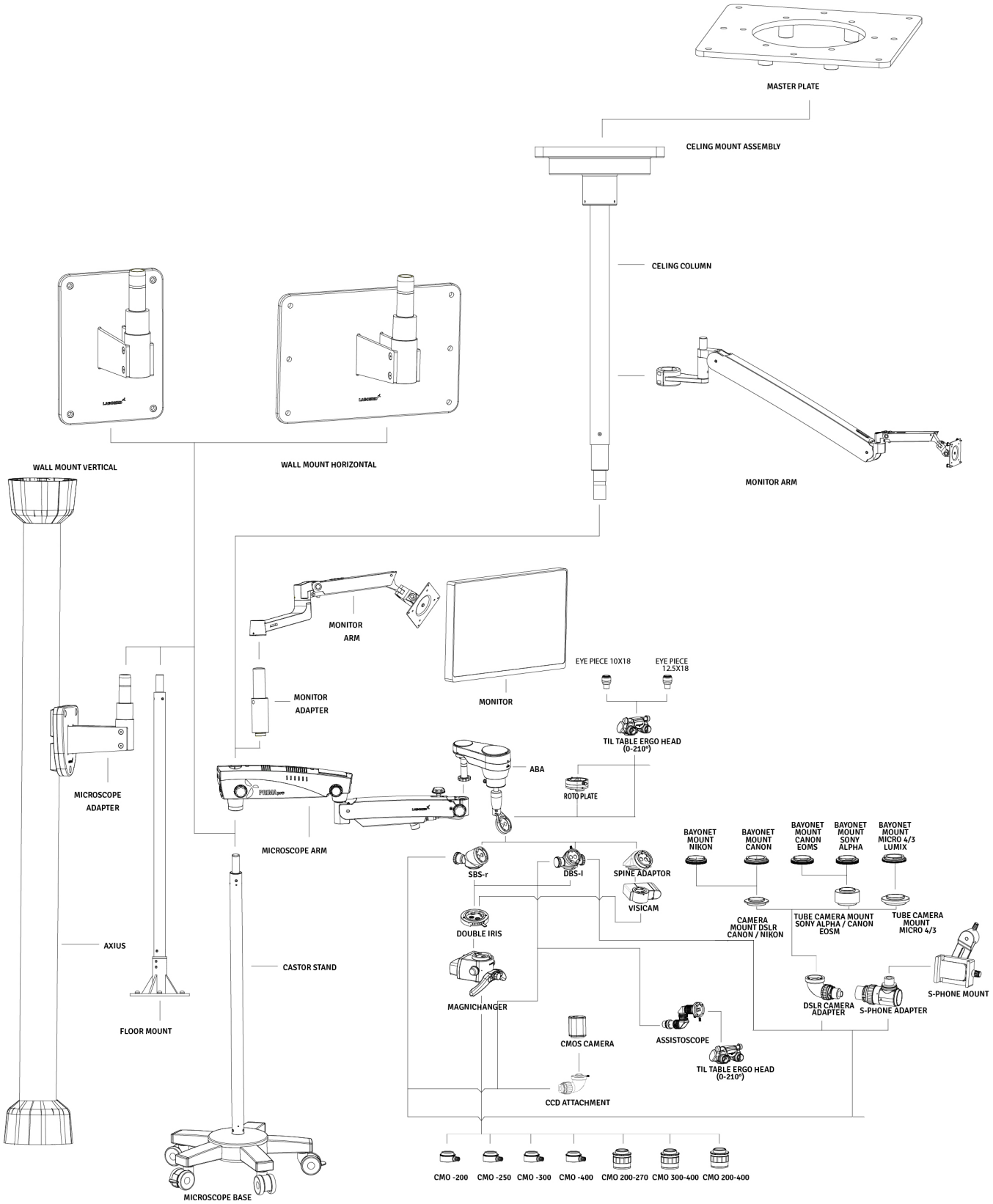

Fig. 49

19. THERMAL CUT-OFF

The instrument is designed with safety provisions. fans in the electrical box provide free - and forced - air circulation to cool the electronic components. The instruments also includes a built-in-safety mechanism called "auto thermal cut-off". This mechanism is activated through Thermistors when the LED temperature rises above 80 degree C. This time Thermistor sensor activates and provide resistance to circuit inflow. This causes LED light blinking as an indicator of high LED temperature. Allow the LED to cool down before switching it on again.

20. TENSION ADJUSTMENT

After Supplementary accessories are mounted, the additional load of suspension arm must be Compensated by adjusting tension on tension control screw provided on suspension arm by moving it clockwise or anticlockwise. Refer fig.-50

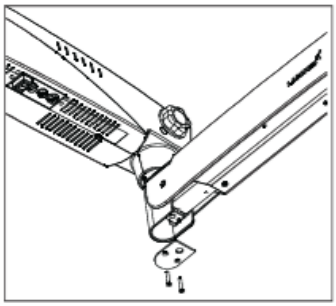

Fig. 50

1. **Remove plate by unscrewing two holes.**
2. **Loosen two allen bolts by using allen wrench of 4 mm as shown in fig.51.**

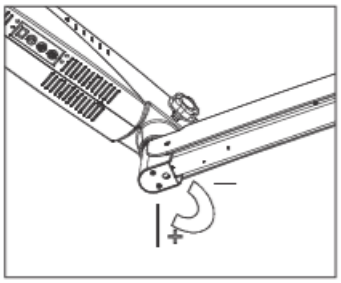

Fig. 51

3. **Use hexagonal wrench of 8mm in bolt (A) shown in fig.52 rotate it clockwise to increase desired tension on Gas spring.**
4. **Re-tighten the two screws.**
5. **Put back the plate.**

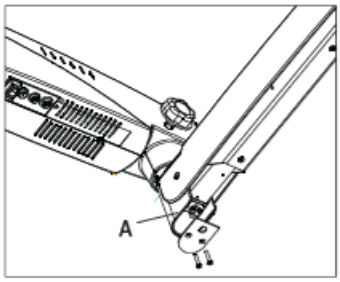

Fig. 52

21 MOVING POSITION OF THE SYSTEM

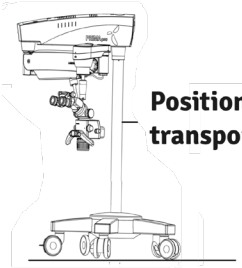

Position of the system for safe transportation.

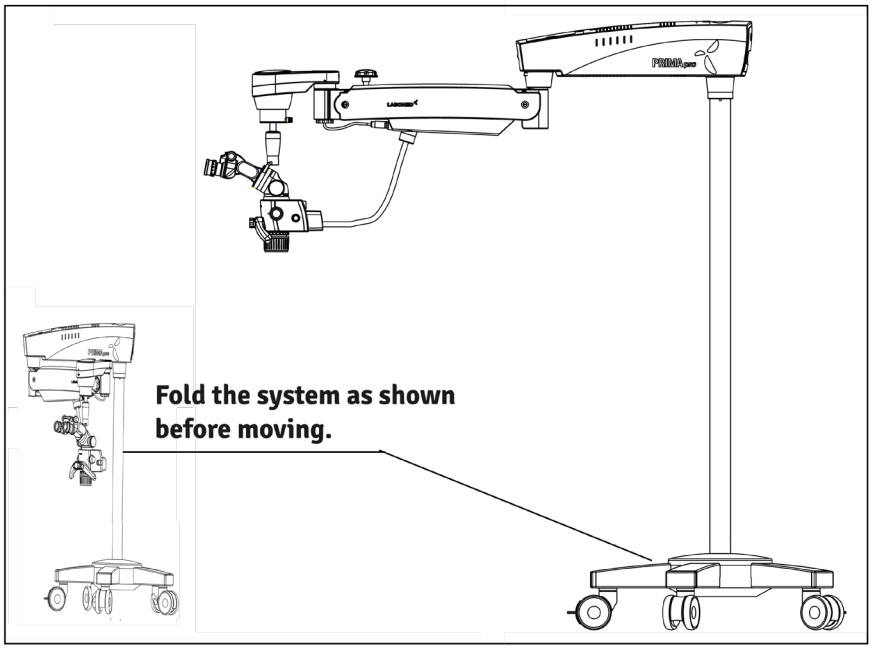

RELOCATING THE STAND

1. **Turn off the unit at the power switch.**
2. **Disconnect the power cable.**
3. **Remove the video cable from the video modules (e.g., video monitor, USB monitor) and the camera control unit.**
4. **Release locks by lifting the Red parts of the locks upward.**
5. **Bring the unit into its moving position.**
6. **Be careful of heights when passing through doorways.**
7. **Avoid collision of any kind.**
8. **Do not go over steps and edges: the stand, might topple!**
9. **Be extremely careful when moving over slopes.**
10. **Do not park the stand on slopes**
11. **Press lock downwards.**
12. **Check whether the stand is locked in position.**

22. CARE AND MAINTENANCE

This instrument is a high grade technological product and not required any special periodical Maintenance if handed carefully. To ensure optimum performance and safe working order of the Instrument, its safe functioning must be checked once every 12 months as per table below. We Recommended having this check performance by our service representative as part of regular Maintenance work. If a failure occurs which you cannot correct using the trouble-shooting table, attach a sign to the instrument stating out of order and contact our service representative for servicing Part or circuit diagram etc.

Surgical Microscope Maintenance/Servicing Check

Microscope: - **Owner: -** **Month: -** **Year:-**

Date of Purchase:

	1	2	3	4	5	6	7	8	9	10	11	12	13	14	15	16	17	18	19	20	21	22	23	24	25	26	27	28	29	30	31
DAILY AFTER USE																															
Wipe of any oily marks/finger prints from eye piece & CMO other Optical parts with lens paper																															
Turn off Microscope																															
Replace Dust Cover																															
Each Month																															
Clean microscope body with water moistened tissue																															
Use lens cleaning fluid on lens tissue to wipe lenses																															
Remove Fibre Optical Cable and clean																															
6 monthly																															
Service Inspection																															
Smooth Function of Locking Knobs																															
Smooth Functioning of Torque Adjustment Mechanism on Suspension Arm																															
Rotary Motion of Carrier																															
INITIALS																															

CARE INSTRUCTIONS:

- Keep accessories away from dust when not in use, e.g. protect them from dust cover.
- Remove dust with a pneumatic rubber bulb and soft rush.
- Use special optics cleaning cloths and pure alcohol for cleaning lenses and eyepieces.
- Protect your colposcope from moisture, fumes, acids and cosmetic materials. Do not store chemicals close to the instrument.
- Protect it from improper handling. Never install other devices sockets or unscrew optical system and Mechanical parts unless explicitly instructed to do so in this manual.
- Protect the microscope from oil and grease. Never oil or grease the guide surfaces or mechanical parts.
- Remove coarse contamination using a damp disposable cloth.
- Use disinfectants based on the following ingredients: aldehyde, alcohols, quaternary ammonium compounds.

CARE AND MAINTENANCE (continued)

- Camera: Clean optical components using a lint-free cloth. Soak the cloth using a little methanol or glass cleaner. Do not use ethanol and spirit.
- Do not clean products and optical components in a cleaning/disinfecting device or ultra sound bath.
- LABOMED Maxi Lite coatings are fungal resistant. If you clean as described above, the coatings will not be damaged.

TROPICAL ENVIRONMENT/FUNGUS:

LABOMED employs certain safety precaution in its manufacturing techniques an and materials. other Preventive measures include:

- Keep optical parts clean.
- Use and store them in a clean environment only.
- Store under UV light when not in use.
- Use in continuously climate-controlled rooms only.
- Keep moisture away using silica gel and cover with a plastic cover.

OCCUPATIONAL SAFETY AND HEALTH PROTECTION:

Observe work safety and health protection of persons responsible for processing contaminated products.

Current regulation of hospital hygiene and prevention of infection must be observed in the Preparation, cleaning and disinfection of the products.

INSTRUCTIONS

WORKPLACE:

Remove surface contamination with a paper towel.

REPROCESSING:

Recommended reprocess a product immediately after use or as & when required as per below cleaning instructions.

CLEANING & SERVICING:

Needed: water, detergent, spirit, microfiber cloth

- Take a Linen or any soft cloth. Moist it Slightly with running tap water (<40°C), using a little detergent and clean the metallic and plastic parts.
- Clean all optical components with spirits or alcohol.
- Dry optical components using a microfiber cloth; dry the rest of the product using a paper towel.
- For servicing as and when required, inform LABOMED after- sales service department.

AUTOCLAVING:

The rubber caps, sleeves and grips supplied by labomed are recommend for the following program for autoclaving:

Temperature:	134° C
Time:	10 minute Standard,
Instrument:	Autoclave

23. CLEANING AND DISINFECTION

FOLLOWING DISINFECTANTS ARE RECOMMENDED FOR CLEANING AND DISINFECTION

1. For cleaning and disinfecting the external painted, powder coated, anodized, plastic, Screen printed and bare metal parts:
Use Normal household bleach (Sodium hypochlorite 5%)- strength 5000 ppm(10 parts water 1 part bleach).

2. For cleaning of optical surfaces:
Use 70% Isopropyl alcohol.

PROCEDURE

- **Take a muskin cloth.**
- **Moist it to feel wet.**
- **Disinfect/clean the surface gently without much hand pressure by pulling the wipe from one end to other end. Do not rub the parts for cleaning.**

NOTE:

1. **Use mask and Gloves while performing cleaning and disinfection.**
2. **While cleaning, muslin cloth should not be dripped wet to prevent seepage and rusting to running/bare parts.**
3. **Alcohol is flammable, its use as a surface disinfectant should be in well-ventilated spaces only.**

24. AMBIENT REQUIREMENT

For Operation	**Temperature** **Rel. Humidity** **(without condensation)** **Air Pressure**	**+10°C...+40°C** **30%.....90%** **700hPa.....1,060hPa**

For Transportation and Storage	**Temperature** **Rel. Humidity** **(without condensation)** **Air Pressure**	**-40°C...+70°C** **10%.....100%** **500hPa.....1,060hPa**

The device is subjected to conformity assessment procedure complying with Article 52 (7) and technical documentation accordance to Annexure Il and III of council regulation (EU) 2017/745. These Devices are Class 1 (without a measuring function and non-invasive) per Rule 1 annex VIII of the regulation MDR 2017/745. All the colposcopy provided with the CE mark indicates agreement with the legal Stipulations.

25. DISPOSAL

Disposal of the instrument must comply with locally applicable laws and regulations.

26. TROUBLESHOOTING TABLE

Problem	Possible Cause	Remedy
No Illumination	Power cable not plugged in	Plug in power cable
	Power switch in OFF position	Press the power switch to ON position
	Defective instrument fuse	Change the fuse
	Defective power cable	Change the power cable
	Line power failure	Contact in-house technician
	Failure of suspension system electronics	Contact the service department
	Light guide not properly inserted in arm of microscope	Insert the light guide properly to get maximum illumination
Insufficient illumination	Brightness level set too low	Adjust brightness control knob
	Light guide not properly inserted in arm of microscope	Insert the light guide properly to get maximum illumination
	Defective light guide (illumination not uniform)	Change the light guide
Inoperative surgical field illumination	Inoperative surgical field illumination	Insert the light guide as far as it will go
	Failure of electronics	Illuminate the surgical field using an alternate illuminator and contact the service department
	Switch off via limit switch on suspension arm system	Move the suspension system into the working position
Insufficient illumination (continued)	The thermal cut-off in the lamp house is contaminated	Clean the thermal cut-off with a dry brush or blow it clean, with compressed air
	Defective fan; failure of system electronics	Contact the service department
Up and down motion of the suspension system is stiff	The friction adjustment screw on the suspension system is tightened too firmly	Loosen the friction adjustment screw on the suspension system as needed
Stand is unstable	The brakes on the wheel are not in use	Engage the brakes
No image is visible in the field of view	Magnichanger is not indexed properly	Index magnichanger properly

27. TECHNICAL SPECIFICATIONS

	Binocular Tubes	**Ergo viewing tube 0° - 210° (tiltable), IPD 49-78mm** **Optional: Straight viewing tube 90°, IPD 45-78mm**
	Eyepieces	**WF 10x/18mm with eye guards, diopter adjustment ± 7mm and diopter lock** **Optional: WF 12.5x/18mm diopter adjustment ± 8mm fixed eye guards**
	Magnichanger	**6 steps: 0.3x, 0.5x, 0.8x, 1.3x, 2.0x and 3.0x**
	FOV (Field of View)	**80.20 – 8.80 mm**
	Magnification range	**2.7x – 17.0x**
	Objective	**F=250mm, manual fine focus**
	Built-in filters	**Yellow, Green, Blue, Truelux**
	Microscope carrier	**360° ABA Carrier**
	Accessories	**Double Iris, Double beam splitter, Rotoplate, Proline range of camera adapters and Rear-view camera adapter, Smartphone adapter, Assistant binocular attachment**
	Light source	**50 W LED; Maximum intensity 100000 LUX**
	Power consumption	**200W maximum**
	Input Voltage	**100V-240V;50/60Hz**
	Stand	**Stable and sturdy Star-base stand with 3 lockable wheels**
	Stand height in Horizontal position	**1100mm**
	Base (dimensions)	**730mm Diameter**
	Stand height	**1733mm**
	Net weight	
	Microscope arm with magnichanger, head & eyepieces	**22 kg**
	Star-base	**100 kg**
	Floor column	**9 kg**
	Ceiling mount column (for standard 3mtr ceiling mount)	**8 kg**
	Wall mount bracket	**12 kg**
	Ceiling mount bracket	**18 kg**

28. GUIDANCE TABLES

Guidance and Manufacturer's Deceleration
Electromagnetic Emissions
All Equipment and Systems

Guidance and Manufacturer's Declaration - Electromagnetic Emissions

The Prima is intended for use in the electromagnetic environment specified below. The customer or user of the Prima should ensure that it is used in such an environment.

Emissions Test	Compliance	Electromagnetic Environment Guidance
RF Emissions CISPR 11	Group 1 Class A	The Prima uses RF energy only for its internal function. Therefore, its RF emissions are very low and are not likely to cause any interference in nearby electronic equipment.
Harmonics IEC 61000-3-2	Class A	The Prima is suitable for use in all establishment, other than domestic, and those directly connected to the public low voltage power network that supplies buildings used for domestic purposes.
Flicker IED 61000-3-3	Complies	

GUIDANCE TABLES (continued)

Guidance and Manufacturer's Deceleration
Electromagnetic Emissions
All Equipment and Systems

Guidance and Manufacturer's Declaration - Electromagnetic Emissions

The Prima is intended for use in the electromagnetic environment specified below. The customer or user of the Prima should ensure that it is used in such an environment.

Immunity Test	IEC 60601 Test level	Compliance Level	Electromagnetic Environment Guidance
ESD IEC 61000-4-2	± 6kv contact ± 8kv Air	± 6kv contact ± 8kv Air	Floors should be wood, concrete or ceramic tile. If floors are synthetic, the R/H should be at least 30%.
EFT IEC 61000-4-4	± 2kv Mains ± 1kv I/Os	± 2kv Mains ± 1kv I/Os	Main power quality should be that of a typical commercial or hospital environment.
Surge IEC 61000-4-5	± 1kv Differential ± 2kv Common	± 1kv Differential ± 2kv Common	Main power quality should be that of a typical commercial or hospital environment.
Voltage dips, Dropouts, IEC 61000-4-11	>95% Dip for 0.5 Cycle 60% Dip for 5 Cycles 30% Dip for 25 Cycles >95% Dip for 5 Seconds	>95% Dip for 0.5 Cycle 60% Dip for 5 Cycles 30% Dip for 25 Cycles >95% Dip for 5 Seconds	Main power quality should be that of a typical commercial or hospital Environment. If the user of the Prima requires continued operation during power mains interruption, it is recommended that the Prima be powered from an uninterruptable power supply or battery.
Power Frequency 50/60Hz Magnetic Field IEC 61000-4-8	3A/m	3A/m	Power frequency magnetic field should be that of a typical commercial or hospital Environment.

GUIDANCE TABLES (continued)

Guidance and Manufacturer's Deceleration
Electromagnetic Immunity
Equipment and Systems that are NOT Life-Supporting
Guidance and Manufacturer's Declaration - Electromagnetic Immunity

The Prima is intended for use in the electromagnetic environment specified below. The customer or user of the Prima Lite DNT should ensure that it is used in such an environment.

Immunity Test	IEC 60601 Test level	Compliance Level	Electromagnetic Environment Guidance
Conducted RF IEC 61000-4-6	3 vrms 150kHz - 80MHz	(v1) = 3 vrms	Portable and mobile Rf communications equipment should be used no closer to any part of the Prima, including cables, than the recommended separation distance calculated from the equation applicable to the frequency of the transmitter.
Radiated RF IEC 61000-4-3	80MHz to 2.5 GHz @ 3V/m	(E1) = 3 V/m	Recommended Separation Distance:
			d=(3.5/v1)(Sqrt P)
			d=(3.5/E1)(Sqrt P)
			80 to 800 MHz
			d=(7/E1)(Sqrt P)
			800 MHz to 2.5 GHz
			Where Prima is the max output power rating of the transmitter in watts (W) according to the transmitter manufacturer and d is the recommended separation distance in meters (m). Field strengths from fixed Rf transmitters, as determined by an electromagnetic site survey, should be less than the compliance levels in each frequency range. Interference may occur in the vicinity of equipment marked with the following symbol.

Note 1: At 80 MHz to 800 MHz, the higher frequency range applies.
Note 2: These guidelines may not apply in all situations. Electromagnetic propagation is affected by absorption and reflection from Structures, objects and people.
*Field strengths from fixed transmitters, such as base stations for radio(cellular/cordless) telephones and land mobile radios, amateur radio, AM and FM radio broadcast, and TV broadcast cannot be predicted theoretically with accuracy. To access the electromagnetic Environment due to fixed RF transmitters, an electromagnetic site survey should be considered. The measured field strength in the location in which the ME Equipment or ME system should be observed to verify normal operation. If abnormal performance is observed, additional measures may be necessary, such as re-orienting or relocating the ME Equipment or ME System.
*Over the frequency range 150kHz to 80 MHz, field strengths should be less than [V1] V/m.

GUIDANCE TABLES (continued)

Recommended separation distance between Portable and Mobile RF Communications equipment and the Prima for ME equipment and ME systems that are not Life-supporting.

Guidance and Manufacturer's Deceleration - Electromagnetic Immunity

Recommended separation distance for between Portable and Mobile RF Communications equipment and the Prima

The Prima is intended for use in electromagnetic environments in which radiated RF disturbances are controlled. The customer or user of the Prima can help prevent electromagnetic interference by Maintaining a minimum distance between portable and mobile RF communications equipment (Transmitters) and the Prima as recommended below, according to the maximum output power of the communication equipment.

Max Output Power of Transmitter (W)	Seperation (m) 150kHz to 80 MHz d=(3.5/v1) (Sqrt P)	Seperation (m) 80kHz to 800 MHz d=(3.5/E1) (Sqrt P)	Seperation (m) 800 MHz to 2.5GHz d = (7/E1) (Sqrt P)
0.01	0.1166	0.1166	0.2333
0.1	0.3689	0.3689	0.7378
1	1.1666	1.1666	2.3333
10	3.6893	3.6893	7.3786
100	11.6666	11.6666	23.3333

For transmitters rated at a maximum output power not listed above, the recommended separation Distance (d) in meters (m) can be estimated using the equation applicable to the frequency of the transmitter, where P is the maximum output power rating of the transmitter in watts (W) according to the transmitter manufacturer.
Note 1: At 80MHz and 800 MHz, the separation distance for the higher frequency range applies.
Note 2: These guidelines may not apply in all situations. Electromagnetic propagation is affected by absorption and reflection from structures, objects and people.

29. GLOSSARY

Ametropia Compensation	Compensation of short-or-far-sightedness. This can be done for each eye using the two individual eyepieces (range: +5 to -5 diopters).
Working Distance	Distance front lens to object level (250mm).
Colour Temperature	Refers to the colour characteristic of a light source. Using colour temperature, one can set the colour of a light source to warm or cold light Relative to the colour of natural light. The unit of measure for colour temperature is Kelvin (K).
Light field diameter	The size of the field, which is illuminated at a distance of 250mm.
Field of View Diameter	The visible area of an object that can be seen through the microscope. The greater the magnification level, the smaller the field of view and vice versa.
Illumination Intensity	Specifies the luminous flux from a light source onto a certain area. The unit of measure for illumination intensity is Lux (Lx).
LED	Light Emitting Diode. Electronic semiconductor device that emits light when an electrical current passes through it.
Eyepiece	The optical portion facing towards the eyes, with which the enlarged image produced by the microscope can be viewed.
DSLR Camera	(Digital Single Lens Reflex) camera with a digital imaging sensor
CCD Camera	(Charged Coupled Device) camera with a technology to store a charge and move this charge out of the photo sensor in an organized way.
CMOS Camera	(Complementary Metal Oxide Semiconductor) camera in which images sensor is a silicon chip that captures and reads light.
DBS	(Double Beam Splitter) splits light beam into two directions (one to eye and one to side port) for simultaneous user viewing and photography, videography, or co-observation. Ratio of light distribution is 70% for eyes and 30% to side ports for photography, videography and co-observation.
DBSi	Double Beam Splitter) splits light beam into two directions (one to eye and one to side port) for simultaneous user viewing and photography, videography, or co-observation. The 30º inclination provides a longer working distance and convenient space for mounting digital cameras.
SBS-R	Rear View Single beam Splitter
ABA	Auto balancing Arm (Electromagnetic Clutch)
True Lux	Improves depth perception, for restorative work to periodontal surgeries and endodontics, aiding in the accurate judgment of tissue structures offering a reliable and consistent light.
Blue Filter	1. Enhance visualization of root canal orifices and pulp chamber details. 2. Differentiate dental materials and ensure complete removal during procedures.
Yellow Filter	1. Protect the surgeon's eyes from phototoxicity by filtering harmful blue wavelengths. 2. Prevent premature hardening of dental composite resin.
Depth of Focus	Depth of focus is a lens optics concept that measures the tolerance of placement of the image plane in relation to the lens.

30. WARRANTY

This product is warranted by LABOMED against defective material and workmanship under normal use for a period of one year from the date of invoice to the original purchaser. (An authorized dealer shall not be considered the original purchaser). Under this warranty, LABOMED's obligation is to repair or replace the defective part or product at LABOMED's discretion.

This warranty applies to new products and does not apply to a product that has been tampered with, altered in any way, misused, damaged by accident or negligence, or which has had the serial number removed, altered, or effaced. Nor shall this warranty be extended to a product installed or operated in a manner not in accordance with the applicable LABOMED instruction manual, nor to a product which has been sold, serviced, installed, or repaired other than by a LABOMED factory or authorized LABOMED Dealer.

All claims under this warranty must be in writing and directed to the LABOMED factory or its authorized dealer for this device making the original sale and must be accompanied by a copy of the purchaser's invoice.

This warranty is in lieu of all other warranties implied or expressed. All implied warranties of merchantability or fitness for a particular use are hereby disclaimed. No representative or other person is authorized to make any other obligations for a LABOMED product. LABOMED shall not be liable for any special, incidental, or consequent damages for any negligence, breach of warranty, strict liability, or any other damages resulting from or relating to design, manufacture, sale, use, or handling of the product.

PRODUCT CHANGES

LABOMED reserves the right to make changes in design or to make additions to or improvements in its products without obligation to add such to products previously manufactured.

CLAIMS FOR CHANGES

We use extreme care in selection, checking, rechecking, and packing to eliminate the possibility of error. If any shipping errors are discovered:

1. **Carefully go through the packing material to be sure nothing was inadvertently overlooked when the unit was unpacked.**
2. **Call the dealer you purchased the product from and report the shortage. The materials are packed at the factory and none should be missing if the box has never been opened.**
3. **Claims must be filed within 30 days of purchase.**

CLAIMS FOR DAMAGES IN TRANSIT

Our shipping responsibility ceases with the safe delivery in good condition to the transportation company. Claims for loss or damage in transit should be made promptly and directly to the transportation company.

If, upon delivery, the outside of the packing case shows evidence of rough handling or damage, the transportation company's agent should be requested to make a "Received in Bad Order" notation on the delivery receipt. If within 48 hours of delivery, concealed damage is noted upon unpacking the shipment and no exterior evidence of rough handling is apparent, the transportation company should be requested to make out a "Bad Order" report. This procedure is necessary in order for the dealer to maintain the right of recovery from the carrier.

Liability release for wall and / or ceiling installations:

By signing below, purchaser confirms that the correct and secure installation of mounting plates and hardware for the LABOMED Prima microscope(s) purchased is the sole responsibility of the purchaser and appointed contractor, and will comply with applicable building codes and good practices. Labo America, Inc. and all of its affiliates will be held harmless and will not bear any liability for damage and/or injury caused by improperly installed and secured mounting plates and hardware.

Purchaser's name and address:

Project location (if different from above):

Licensed contractor/company name and details (address, lic#, phone number)

Client Signature:

Contractor Signature:

Date:

Date:

Labo America, Inc.
920 Auburn Court
Fremont CA 94538

Fax: 510-445-1317
Global: sales@laboamerica.com
www.laboamerica.com

Revision History

Rev.No.	Date of Release	DCR #	Change	App. By
1.0	January, 2024	New Development	New revision	S.Bal
1.1	August, 2024	DCR/11/2024	Regulatory information	S.Bal
1.2	Sep, 2024	DCR/12/2024	Symbols updated per EU MDR 2017/745 & ISO 15223	S Bal
1.3	Jan, 2025	DCR/01/2025	Max. Safe Load symbol added	S Bal
1.4	March, 2025	DCR/07/2025	added wall mount diagrams for more clarification	S Bal
1.5	June, 2025	DCR/14/2025	corrected (MDR Regulation (EU) 2017/745	S.bal
1.6	July, 2025	DCR/16/2025	silicone cover instructions added	S.bal
1.7		ECR/22/2025	Ceiling Mount Details Updated	S.bal
1.8	Feb, 2026	DCR/04/2026	IP Code Added	S.bal

LABOMED®
ideas for vision

Manufactured By:

Labotech Microscopes India Pvt. Ltd.

19-HSIDC, Industrial Estate, Amb
Cantt - 133006 Haryana (INDIA)

sales@labomedworld.com
www.labomedworld.com

EC REP

Labomed Europe b.v
Essebaan 50
2908 LK Capelle aan den IJssel
The Netherlands
Tel: +31 (0)10 4584222
Fax: +31 (0)10 4508251
E-mail: info@labomedeurope.com
www.labomedeurope.com

CE

A16372 UL REGISTERED FIRM ISO 13485:2016

LABOTECH MICROSCOPES INDIA Pvt Ltd