PRIMA Mμ

SURGICAL MICROSCOPE

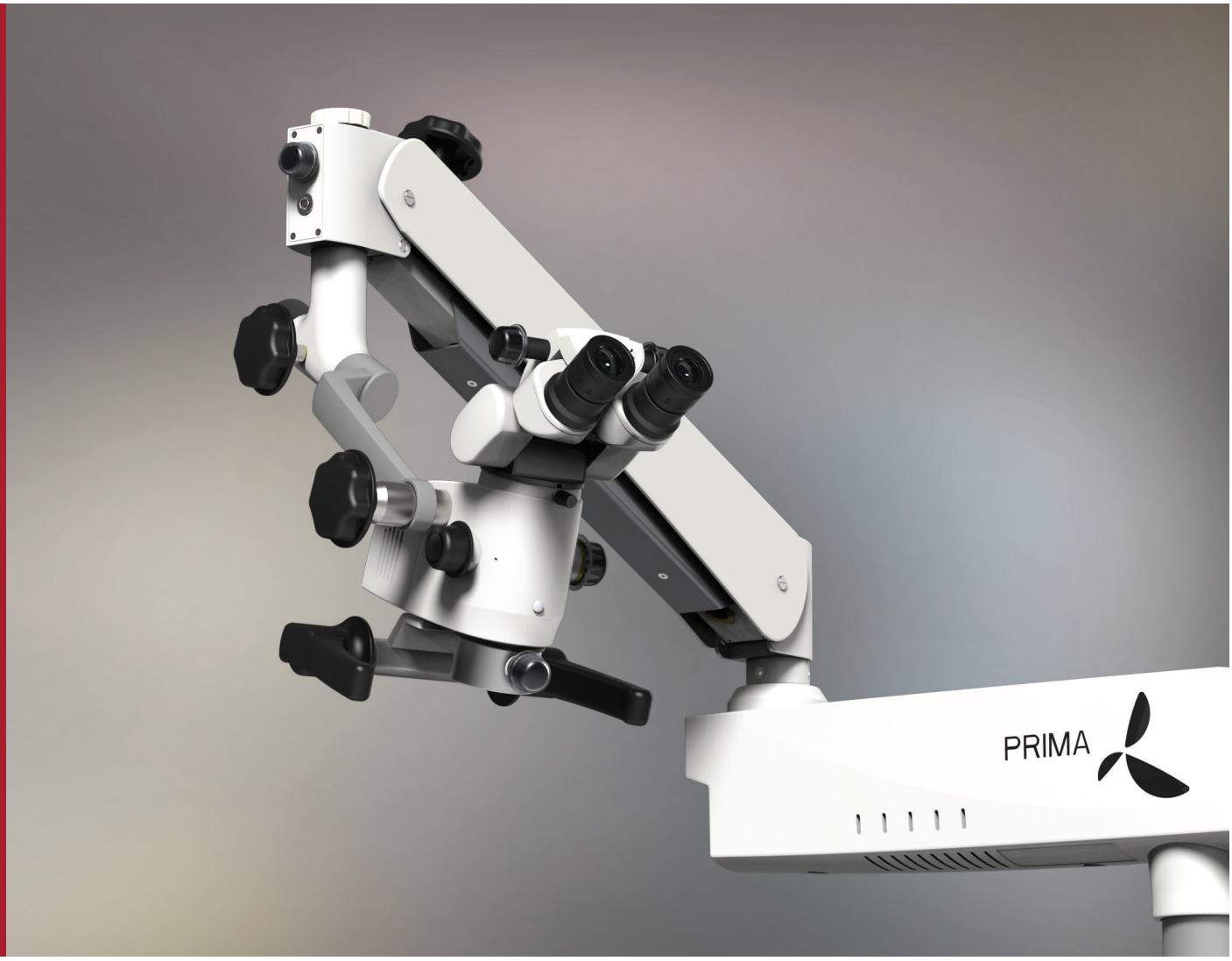

LABOMED®

ideas for vision

HIGH PERFORMANCE FOR SMALLER BUDGETS

LABOMED®

PRIMA Mμ

The LABOMED® Prima Mu microscope was designed to address a variety of needs in clinical environments, thanks to a highly modular form factor with the very best in optical, illumination, and mechanical engineering.

A well corrected apochromatic optical system coated with proprietary MaxLite™ coatings mean physicians see images of the highest color fidelity with virtually no chromatic or spherical aberration.

An efficient LED light source provides well over 75,000 lux, with an estimated run time of 50,000 hours. A highly fluid mechanical design provides for smooth and accurate microscope positioning.

What does this all mean? A lifetime of delightful, hassle-free use.

AN ALL-IN-ONE SOLUTION

DENTAL

The PRIMA Mμ can be configured for dental surgery using a high performance, tilting observation head and the *NuVar*™ 10 CMO with variable focal length from 300mm to 400mm. This ergonomic arrangement facilitates superb imaging and a comfortable working posture suitable for dental procedures.

ENT

With a straight observation head and optional motorized fine focus system, the PRIMA Mμ provides operating comfort and unparalleled benefits in ENT surgeries. A host of accessories such as cameras, beam splitters, and camera adapters enable high quality documentation.

OPH

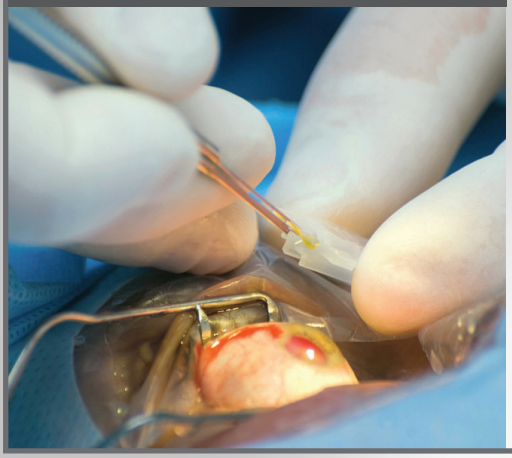

The PRIMA Mμ provides unmatched performance through an efficient LED illumination system and an apochromatic magnification changer. A brilliant Red-Reflex optical arrangement promotes better quality and greater reliability during ophthalmic procedures.

- 0-210 ° tilting ergonomic observation head
- 3-step magnification changer
- Wide field 10X eyepieces with lockable diopter
- Dental carrier
- CMO: Fixed or *NuVar*™ 10(F300 - 400) with protector lens.
- Shadow-free illumination
- Swing-in filter

- Straight observation head – f/170 mm
- 3-step magnification changer
- Wide field 10X eyepieces with lockable diopter
- Fixed CMO with fine focus control
- Shadow-free illumination
- Swing-in filter

- 45 ° inclined or 0-210 ° tilting ergonomic observation head
- 3-step magnification changer
- Wide field 10X eyepieces with lockable diopter
- Focus with motorized z-axis drive
- Red Reflex illumination
- Swing-in filter

PERFECT VISUALIZATION – CLEAR DOCUMENTATI

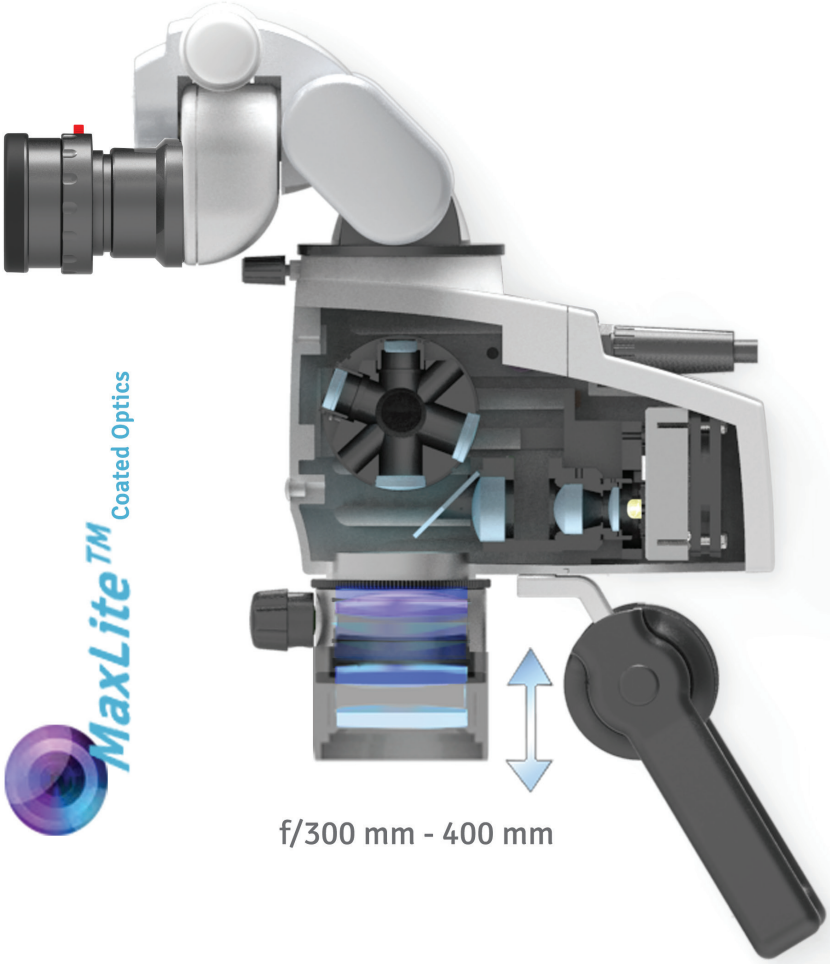

LABOMED proprietary *MaxLite™* coating technology highlights the latest advancements in optical surface treatment yielding *No-Glare* images with true-to-life colors and contrast.

The NuVar variable focus objective enables users to select the ideal working distance based on procedure requirements. NuVar provides fluid adjustment of focal length from 300mm to 400mm.

To address digital documentation needs, a host of camera adapters, smart phone adapters, beam splitters from the LABOMED *ProLine* series are available.

DSLR Adapter

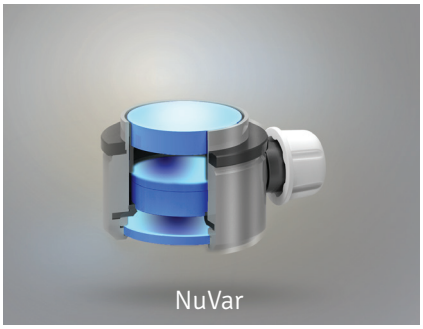
NuVar

ON

With an arm design that has a lower center of gravity, the PRIMA Mu promises superior balance and near vibration-free viewing at all magnifications, making it a smart choice for space-constrained environments.

A range of mounting options are available, including a compact floor stand on a lockable base, wall mount, ceiling mount, and table mount.

The LABOMED *ProLine* offers video and intermediary accessories, including beam splitters, a complete range of camera adapters for documentation needs.

A carefully designed illumination system means a true-to-day color temperature 5700K. This no-heat system is practically maintenance free with over 50,000 hours of working life.

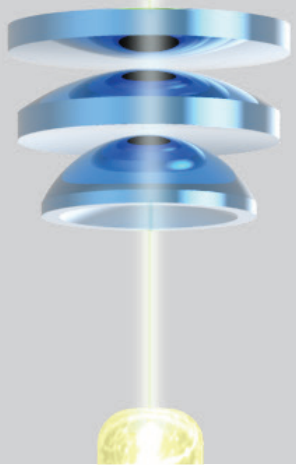

Wall Mount

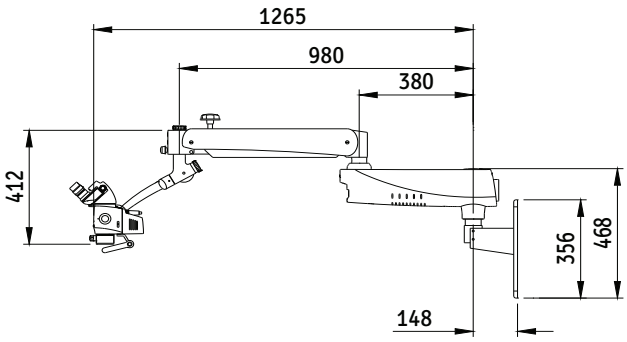

Table Mount

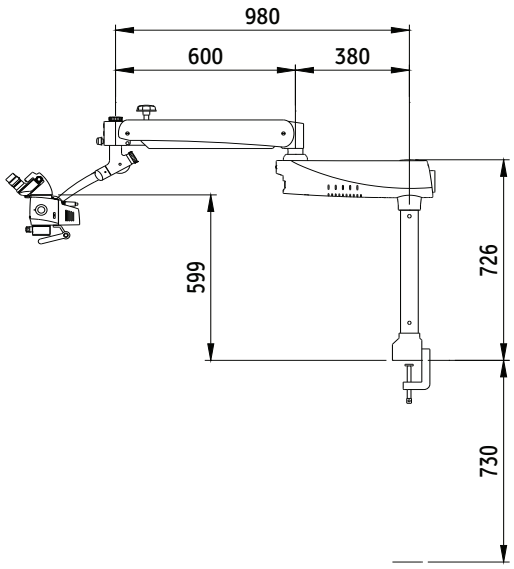

Floor Mount

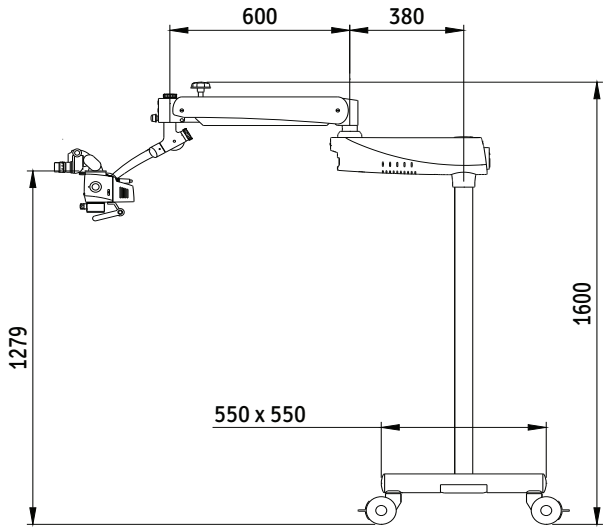

All dimensions in mm

PRIMA MU

SPECIFICATIONS

	DNT	ENT	OPH
Observation Tube	0-210° Tiltable Binocular head Option: Binocular Straight 90°	Binocular Straight 90° Option: 0-210° Tiltable Binocular	45° Binocular Inclined head Option: 0-210° Tiltable Binocular
IPD	49-78 mm	49-78 mm	49-78 mm
Eyepieces	Standard: WF 10x/18mm with eyeguard Option: WF 12.5/18mm with eyeguard	Standard: WF 10x/18mm with eyeguard Option: WF 12.5/18mm with eyeguard	Standard: WF 10x/18mm with eyeguard Option: WF 12.5/18mm with eyeguard
Dioptre Adjustment	10x: ±7mm ,12.5x: ±8mm	10x: ±7mm ,12.5x: ±8mm	10x: ±7mm ,12.5x: ±8mm
Magnichanger	Apochromatic Maxlite coated , 3 steps 0.6x,1.0x,1.6x	Apochromatic Maxlite coated, 3 steps 0.6x,1.0x,1.6x	Apochromatic Maxlite coated , 3 steps 0.6x,1.0x,1.6x
Objective	Standard: 250 mm focusable Option: f:300 mm & f:400 mm; focusable *NuVar™* 7: f 290-360 mm WD: 200-270 mm focusable *NuVar™* 10: f 300-400 mm WD: 220-320 mm focusable	Standard: 250 mm focusable Option: f:300 mm & f:400 mm; focusable *NuVar™* 7: f 290-360 mm WD: 200-270 mm focusable *NuVar™* 10: f 300-400 mm WD: 220-320 mm focusable	Standard: 200 mm fixed Option: f:175 mm fixed NA
Vertical Movement of arm	500 mm with power saver light cutoff at parking position	500 mm with power saver light cutoff at parking position	500 mm with power saver light cutoff at parking position
Microscope carrier movement	310°	310°	310°
Foot switch	NA	NA	2 function up & down foot switch
Z axis movement	NA	NA	yes
Light Source	27W LED, 100-240V, 75k	27W LED, 100-240V, 75k	27W LED, 100-240V, 75k
Maximum Wattage	60 Watts	60 Watts	60 Watts
Color Temprature	5700k	5700k	5700k
Built in filters	Yellow	Green	Blue
XY movement	NA	NA	NA

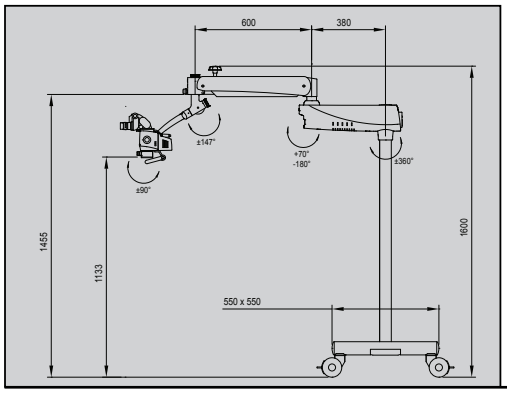

All dimensions in mm

DESCRIPTION	CONFIGURATION	CATALOG NO.
Prima Mμ	Dental	6211000
Prima Mμ	ENT	6212000
Prima Mμ	Ophthalmic	6214000
Prima Mμ	Dental trainer table mount	6215000
Prima Mμ	ENT trainer table mount	6212100

Labotech Microscopes India Pvt Ltd
#19 HSIDC Industrial Estate
Ambala Cantt
Haryana, Pincode: 133006
INDIA

LABOMED®

Distributor

A28240 ISO 13485:2016

LABOTRON Instruments Pvt Ltd

6210000-796 1.3 300523